Hybrid Inverter

SUN-3K-SG06LP1-24-EU-BM1

SUN-3K-SG06LP1-EU-BM1

SUN-3.6K-SG06LP1-EU-BM2

SUN-4K-SG06LP1-EU-BM2

SUN-4.6K-SG06LP1-EU-BM2

SUN-5K-SG06LP1-EU-BM2

SUN-6K-SG06LP1-EU-BM2

User Manual



Contents

1. Safety Introductions 01-02
2. Product instructions 02-05
   2.1 Product Overview and Size
   2.2 Product Features
   2.3 Basic System Architecture
3. Installation 06-34
   3.1 Parts list
   3.2 Product handling requirements
   3.3 Mounting instructions
   3.4 Battery connection
   3.5 Grid connection and backup load connection
   3.6 PV Connection
   3.7 CT Connection
   3.7.1 Meter Connection
   3.8 Earth Connection(mandatory)
   3.9 WIFI Connection
   3.10 Wiring System for Inverter
   3.11 Typical application diagram of diesel generator
   3.12 Single phase parallel connection diagram
   3.13 Three phase Parallel Inverter
4. OPERATION 35
   4.1 Power ON/OFF
   4.2 Operation and Display Panel
5. LCD Display Icons 36-51
   5.1 Main Screen
   5.2 Solar Power Curve
   5.3 Curve Page-Solar & Load & Grid
   5.4 System Setup Menu
   5.5 Basic Setup Menu
   5.6 Battery Setup Menu
   5.7 System Work Mode Setup Menu
   5.8 Grid Setup Menu
   5.9 The method of CEI-021 Standard Self-Check
   5.10 Generator Port Use Setup Menu
   5.11 Advanced Function Setup Menu
   5.12 Device Info Setup Menu
6. Mode 51-52
7. Fault information and processing 53-55
8. Limitation of Liability 55
9. Datasheet 56-57
10. Appendix I 58-59
11. Appendix II 60
12. EU Declaration of Conformity 60-62

About This Manual

The manual mainly describes the product information, guidelines for installation, operation and maintenance. The manual cannot include complete information about the photovoltaic (PV) system.

Security Declaration

For detailed information regarding the product's network security vulnerability response procedures and the disclosure of related vulnerabilities, please refer to the Deye Security Center at https://sec.deyecloud.com.

How to Use This Manual

Read the manual and other related documents before performing any operation on the inverter. Documents must be stored carefully and be available at all times.

Contents may be periodically updated or revised due to product development. The information in this manual is subject to change without notice. The latest manual can be acquired via service@deye.com.cn

1. Safety Introductions

Labels description

Label	Description
	Caution, risk of electric shock symbol indicates important safety instructions, which if not correctly followed, could result in electric shock.
	The DC input terminals of the inverter must not be grounded.
	Surface high temperature, Please do not touch the inverter case.
	The AC and DC circuits must be disconnected separately, and the maintenance personnel must wait for 5 minutes before they are completely powered off before they can start working.
	CE mark of conformity
	Please read the instructions carefully before use.
	Symbol for the marking of electrical and electronics devices according to Directive 2002/96/EC. Indicates that the device, accessories and the packaging must not be disposed as unsorted municipal waste and must be collected separately at the end of the usage. Please follow Local Ordinances or Regulations for disposal or contact an authorized representative of the manufacturer for information concerning the decommissioning of equipment.

· This chapter contains important safety and operating instructions. Read and keep this manual for future reference.
· Before using the inverter, please read the instructions and warning signs of the battery and corresponding sections in the instruction manual.
· Do not disassemble the inverter. If you need maintenance or repair, take it to a professional service center.
· Improper reassembly may result in electric shock or fire.
· To reduce risk of electric shock, disconnect all wires before attempting any maintenance or cleaning. Turning off the unit will not reduce this risk.
· Caution: Only qualified personnel can install this device with battery.
· Never charge a frozen battery.
· For optimum operation of this inverter, please follow required specification to select appropriate cable size. It is very important to correctly operate this inverter.
· Be very cautious when working with metal tools on or around batteries. Dropping a tool may cause a spark or short circuit in batteries or other electrical parts, even cause an explosion.
· Please strictly follow installation procedure when you want to disconnect AC or DC terminals. Please refer to "Installation" section of this manual for the details.
· Grounding instructions - this inverter should be connected to a permanent grounded wiring system. Be sure to comply with local requirements and regulation to install this inverter.
· Never cause AC output and DC input short circuited. Do not connect to the mains when DC input short circuits.

1.1 Radio Interference Statement

The equipment may radiate radio frequency energy. If the instructions are not followed during installation and use of the equipment, it may cause harmful interference to radio communications. However, there is no guarantee that interference will not occur in a particular installation situation. If this equipment causes harmful interference to radio or television reception, the following measures can be taken to resolve the problem:

✔ Relocate the receiving antenna away from the equipment.
✔ Seek assistance from the distributor or an experienced radio/TV technician.

Changes or modifications not expressly approved by the party responsible for compliance may void the user's authority to operate the equipment.

2. Product Introductions

This is a multifunctional inverter, combining functions of inverter, solar charger and battery charger to offer uninterruptible power support with portable size. Its comprehensive LCD display offers user configurable and easy accessible button operation such as battery charging, AC/solar charging, and acceptable input voltage based on different applications.

2.1 Product Overview and Size

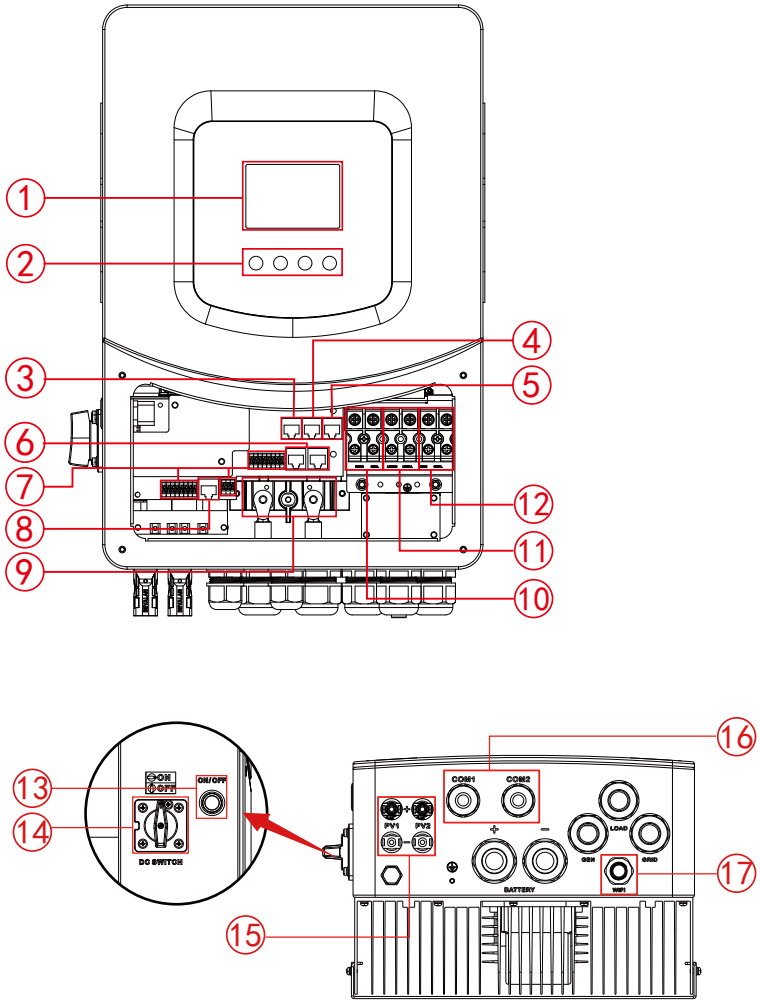

1: LCD display
2: Function Buttons
3: Modbus Port
4: BMS 485/CAN Port
5: Meter Port
6: Parallel port
7: Function Port
8: DRM Port
9: Battery input connectors
10: Generator input
11: Load
12: Grid
13: Power on/off button
14: DC Switch
15: PV input
16: Communication cable inlet
17: The outlet of antenna

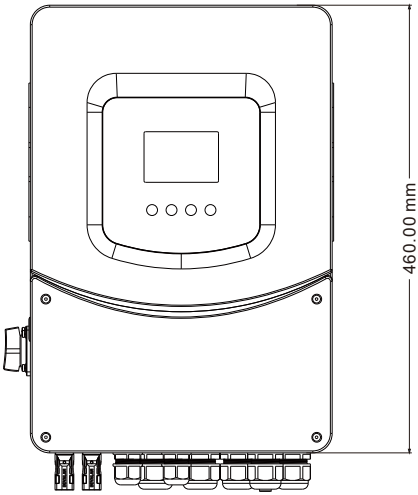

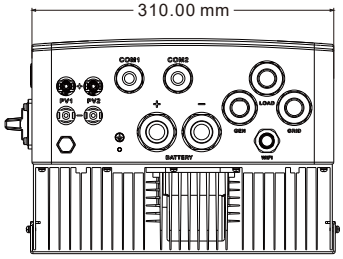

Inverter Size

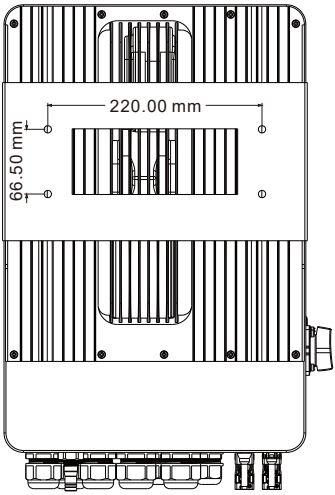

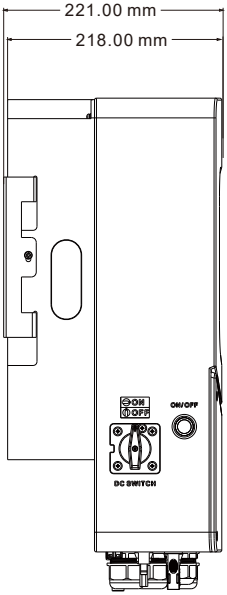

2.2 Product Features

- Self-consumption and feed-in to the grid.
- Auto restart while AC is recovering.
- Programmable supply priority for battery or grid.
- Programmable multiple operation modes: On grid, off grid and UPS.
- Configurable battery charging current/voltage based on applications by LCD setting.
- Configurable AC/Solar/Generator Charger priority by LCD setting.
- Compatible with mains voltage or generator power.
- Overload/over temperature/short circuit protection.
- Smart battery charger design for optimized battery performance
- With limit function, prevent excess power overflow to the grid.
- Supporting WIFI monitoring and build-in 2 strings of MPP trackers
- Smart three-stage charging strategy with customizable settings can optimize battery performance.
- Time of use function.
- Smart Load Function.

2.3 Basic System Architecture

The following illustration shows basic application of this inverter.
It also includes following devices to have a Complete running system.
- Generator or Utility
- PV modules

Consult with your system integrator for other possible system architectures depending on your requirements.
This inverter can power all kinds of appliances in home or office environment, including motor type appliances such as refrigerator and air conditioner.

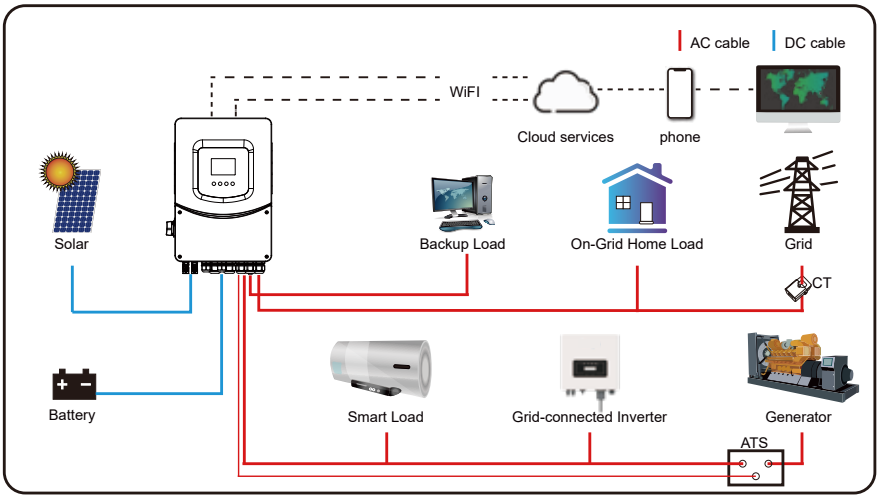

3. Installation

3.1 Parts List

Check the equipment before installation. Please make sure nothing is damaged in the package. You should have received the items in the following package:

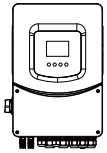

Hybrid inverter
x1

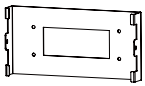

Wall mounting bracket
x1

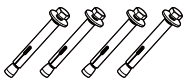

Stainless steel
anti-collision bolt M6*60
x4



Stainless steel mounting
screws M4*12 x4



Parallel communication
cable x1



L-type Hexagon wrench
x1



Battery temperature
sensor x1

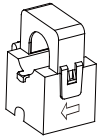

Sensor Clamp
x1

User
manual

User manual x1

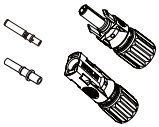

DC+/DC- Plug connectors
including metal terminal
xN

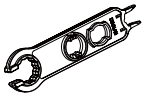

Solar Photovoltaic
Connector Special
Spanner x1

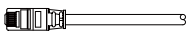

DRM connector
(optional) x1

1

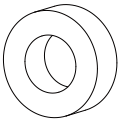

Magnetic ring for battery
x1

2



Magnetic ring for
Grid port x1

3



Magnetic ring
x3*

*One for CT and external temperature sensor, another two for Gen and Load ports.

Packing box of magnetic ring

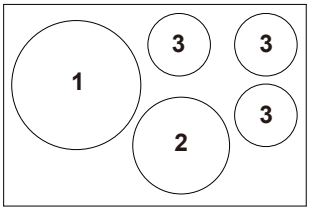

*1: 64x40x20 mm
2: 27x46x25 mm
3: 31x29x19 mm

3.2 Product handling requirements

Lift the inverter out of the packing box and transport it to designated installation location.

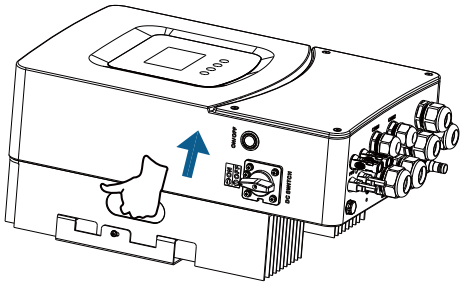

transport

CAUTION:

Improper handling may cause personal injury!

- Arrange an appropriate number of personnel to carry the inverter according to its weight, and installation personnel should wear protective equipment such as anti-impact shoes and gloves.
- Placing the inverter directly on a hard ground may cause damage to its metal enclosure. Protective materials such as sponge pad or foam cushion should be placed underneath the inverter.
- Move the inverter by one or two people or by using a proper transport tool.
- Move the inverter by holding the handles on it. Do not move the inverter by holding the terminals.

3.3 Mounting instructions

Installation Precaution

This Hybrid inverter is designed for outdoor use(IP65), Please make sure the installation site meets below conditions:

· Not in direct sunlight
· Not in areas where highly flammable materials are stored.
· Not in potential explosive areas.
· Not in the cool air directly.
· Not near the television Antenna or antenna cable.
· Not higher than altitude of about 3000 meters above sea level.
· Not in environment of precipitation or humidity(>95%)

Installations Tools

Installation tools can refer to the following recommended ones. Also, use other auxiliary tools on site.

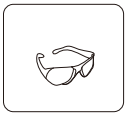
Protective goggles

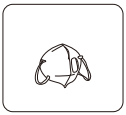
Anti-dust mask

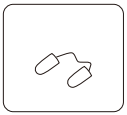
Earplugs


Work gloves


Work shoes

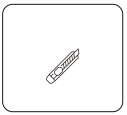
Utlity Knife

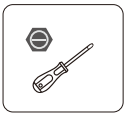
Slotted screwdriver


Cross screwdriver

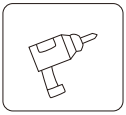
Percussion drill

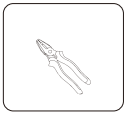
Pliers

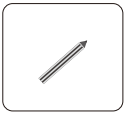
Marker


Level


Rubber hammer

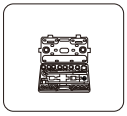
socket wrenches set

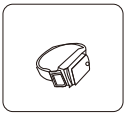
Anti-static wrist strap


Wire cutter


Wire stripper

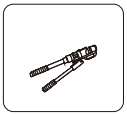
Hydraulic pliers

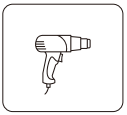
Heat gun

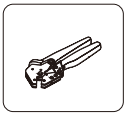
Crimping tool4-6mm²

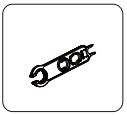
Solar connector wrench


Multimeter ⩾1100 Vdc


RJ45 crimping plier


Cleaner

Considering the following points before selecting where to install:

· Please select a vertical wall with load-bearing capacity for installation, suitable for installation on concrete or other non-flammable surfaces,installation is shown below.
· Install this inverter at eye level in order to allow the LCD display to be read at all times.
· The ambient temperature is recommeded to be between -40~60℃ to ensure optimal operation.
· Be sure to keep other objects and surfaces as shown in the diagram to guarantee sufficient heat dissipation and have enough space for removing wires.

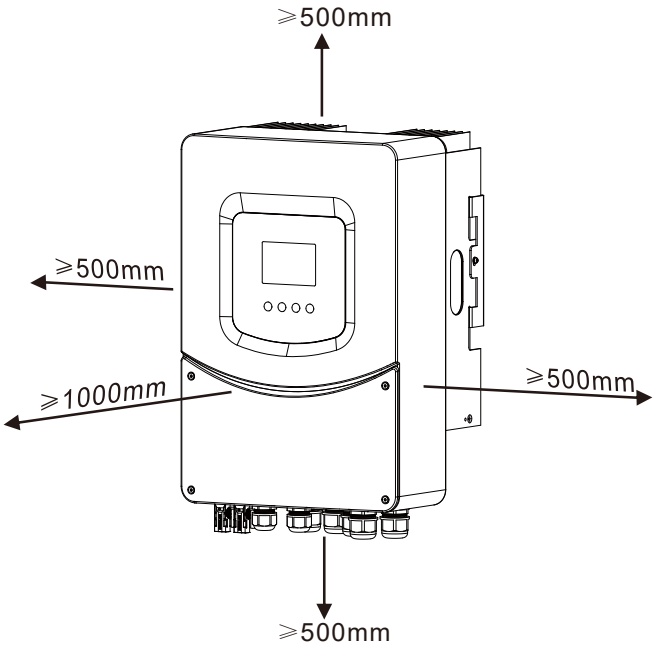

For proper air circulation to dissipate heat, allow a clearance of approx. 50cm to the side and approx. 50cm above and below the unit. And 100cm to the front.

Mounting the inverter

Remember that this inverter is heavy! Please be careful when lifting out from the package. Choose the recommend drill head(as shown in below pic) to drill 4 holes on the wall, 82-90mm deep.

1. Use a proper hammer to fit the expansion bolt into the holes.
2. Carry the inverter and holding it, make sure the hanger aim at the expansion bolt,fix the inverter on the wall.
3. Fasten the screw head of the expansion bolt to finish the mounting.

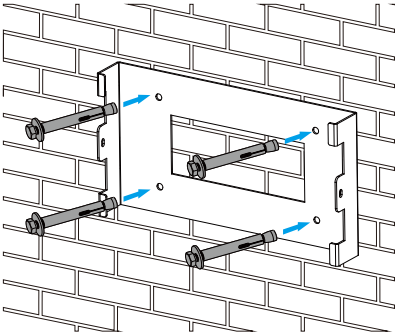

Inverter hanging plate installation

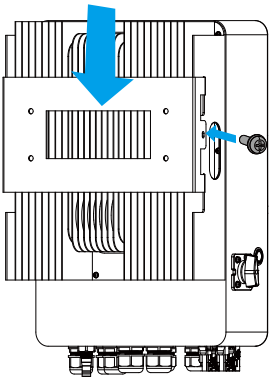

Please AVOID direct sunlight, rain exposure, snow laying up during installation and operation. Before connecting all wires, please take off the metal cover by removing screws as shown below:

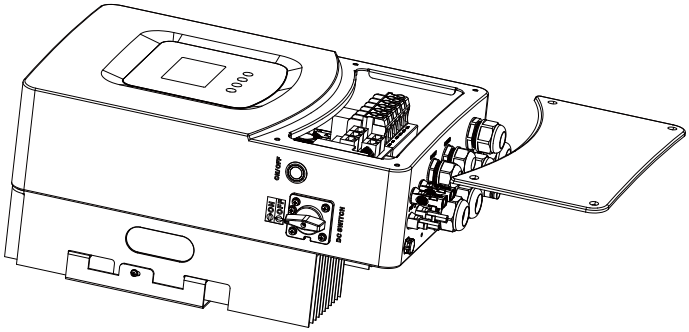

3.4 Battery connection

For safe operation and compliance, a separate DC over-current protector or disconnect device is required between the battery and the inverter. In some applications, switching devices may not be required but over-current protectors are still required. Refer to the typical amperage in the page 31 for the required fuse or circuit breaker size.

Model	*Wire Size*	*Cable(mm²)*	*Torque value(max)*
3kW-24	0AWG	50	5.2Nm
3kW	4AWG	16	5.2Nm
3.6/4kW	2AWG	25	5.2Nm
4.6/5kW	1AWG	35	5.2Nm
6kW	0AWG	50	5.2Nm

Chart 3-2 Cable size

All wiring must be performed by a professional person.

Connecting the battery with a suitable cable is important for safe and efficient operation of the system. To reduce the risk of injury, refer to Chart 3-2 for recommended cables.

Please follow below steps to implement battery connection:

1. Please choose a suitable battery cable with correct connector which can well fit into the battery terminals.
2. Use a suitable screwdriver to unscrew the bolts and fit the battery connectors in, then fasten the bolt by the screwdriver, make sure the bolts are tightened with torque of 5.2 N.M in clockwise direction.
3. Make sure polarity at both the battery and inverter is correctly connected.

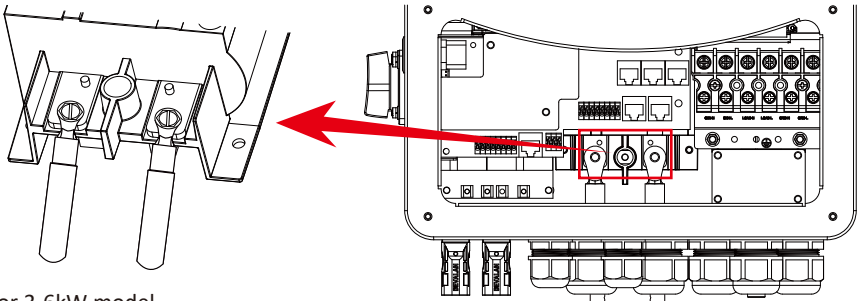

For 3-6kW model,
battery connector screw size: M6

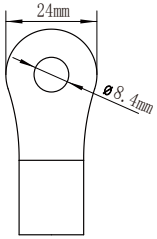

DC Battery Input

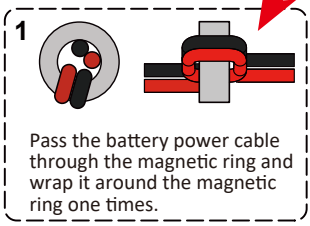

4. In case of children touch or insects go into the inverter, Please make sure the inverter connector is fasten to waterproof position by twist it clockwise.

Installation must be performed with care.

Before making the final DC connection or closing DC breaker/disconnect, be sure positive(+) must be connect to positive(+) and negative(-) must be connected to negative(-). Reverse polarity connection on battery will damage the inverter.

3.4.2 Function port definition

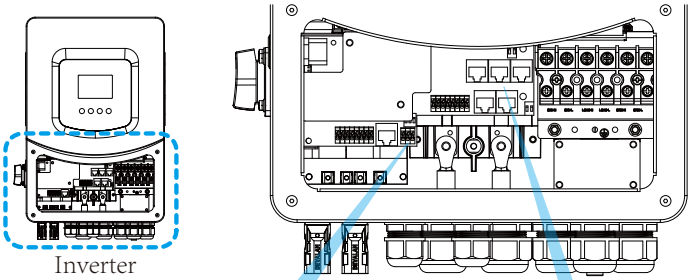

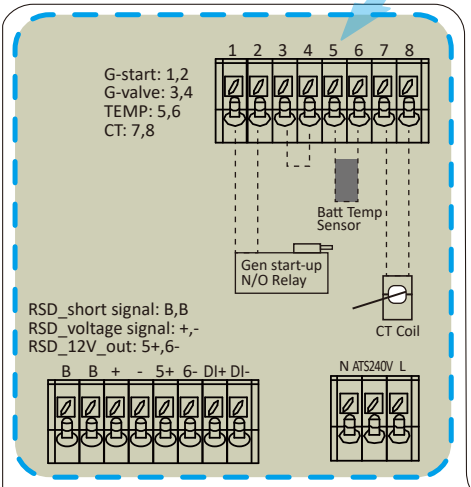

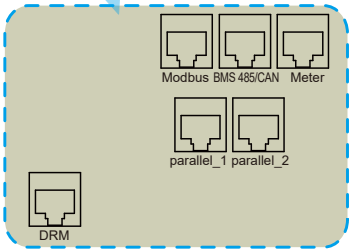

Modbus: Reserved.
BMS 485/CAN: For battery communication.
Meter: For energy meter communication.
Parallel 1: Parallel communication port 1 (CAN interface).
Parallel 2: Parallel communication port 2 (CAN interface).
DRM: It is used to accept the external input signal(Digital input).

G-start/G-valve(1,2/3,4): dry contact signal for startup the diesel generator. When the "GEN signal" is active, the open contact (G-start/G-valve) will switch on (no voltage output). If the "Signal ISLAND MODE" is ticked, the G-valve port will be the dry contact signal for startup the diesel generator. If "Signal ISLAND MODE" is not ticked, the G-start port will be the dry contact signal for startup the diesel generator.
TEMP(5,6): battery temperature sensor for lead acid battery.
CT(7,8): current transformer for "zero export to CT" mode.

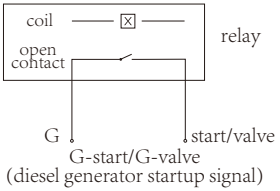

ATS240V: If the conditions are met, it will output 230Vac.
ATS Switch: This DIP Switch (2 set) is used to turn on/off the output voltage of ATS port. When both of them is in "ON" position, then the output voltage of ATS port will be active. When both of them is in "OFF" position, then the output voltage of ATS port will be not active.

RSD_short signal/RSD_voltage signal(B,B/+,-): when the terminal “B” & “B” is short-circuited with additional wire connection, or there’s 12Vdc input at the terminal “+ & - “, then the 12Vdc of RSD+ & RSD- will disappear immediately, and the inverter will shutdown immediately.
RSD_12V_out(5+,6-): When battery is connected and the inverter is in "ON" status, it will provide 12Vdc.
DI+,DI-: According to "Article 14a of the German Energy Industry Act (EnWG)" (2024) The Energy Industry Act, The digital interface DI of the hybrid inverters can receive an external control signal to reduce the charging power from the grid to less than 4.2kW. When the signal disappears, the inverter can return to its previous operating state.

DIP Switch for Parallel Function: Parallel communication resistor. If the number of inverters in the parallel system is less than or equal to 6, all inverter’s DIP switch (1&2) need be ON position. If the number of inverters in parallel system exceeds 6, the main 6pcs inverter’s DIP switch needs to be ON position. And the other inverter DIP switch (1&2) needs to be OFF position.

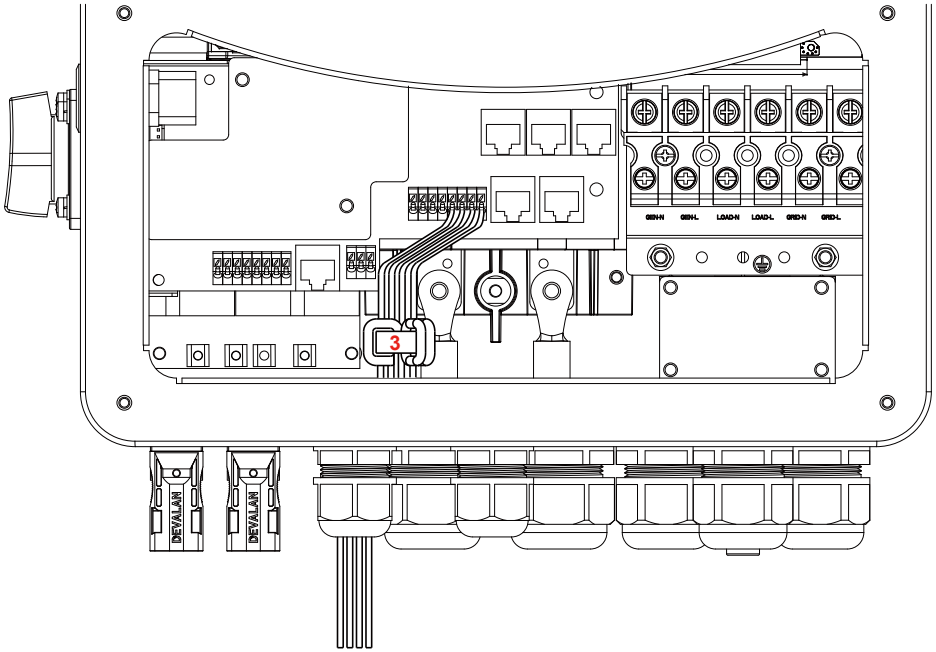

No.	Function Port	Installation Instructions
3	TEMP (5,6) CT (7,8)	Wrap the wires one laps around the magnetic ring, then thread the end of wires through the magnetic ring.

3.4.3 Temperature sensor connection for lead-acid battery

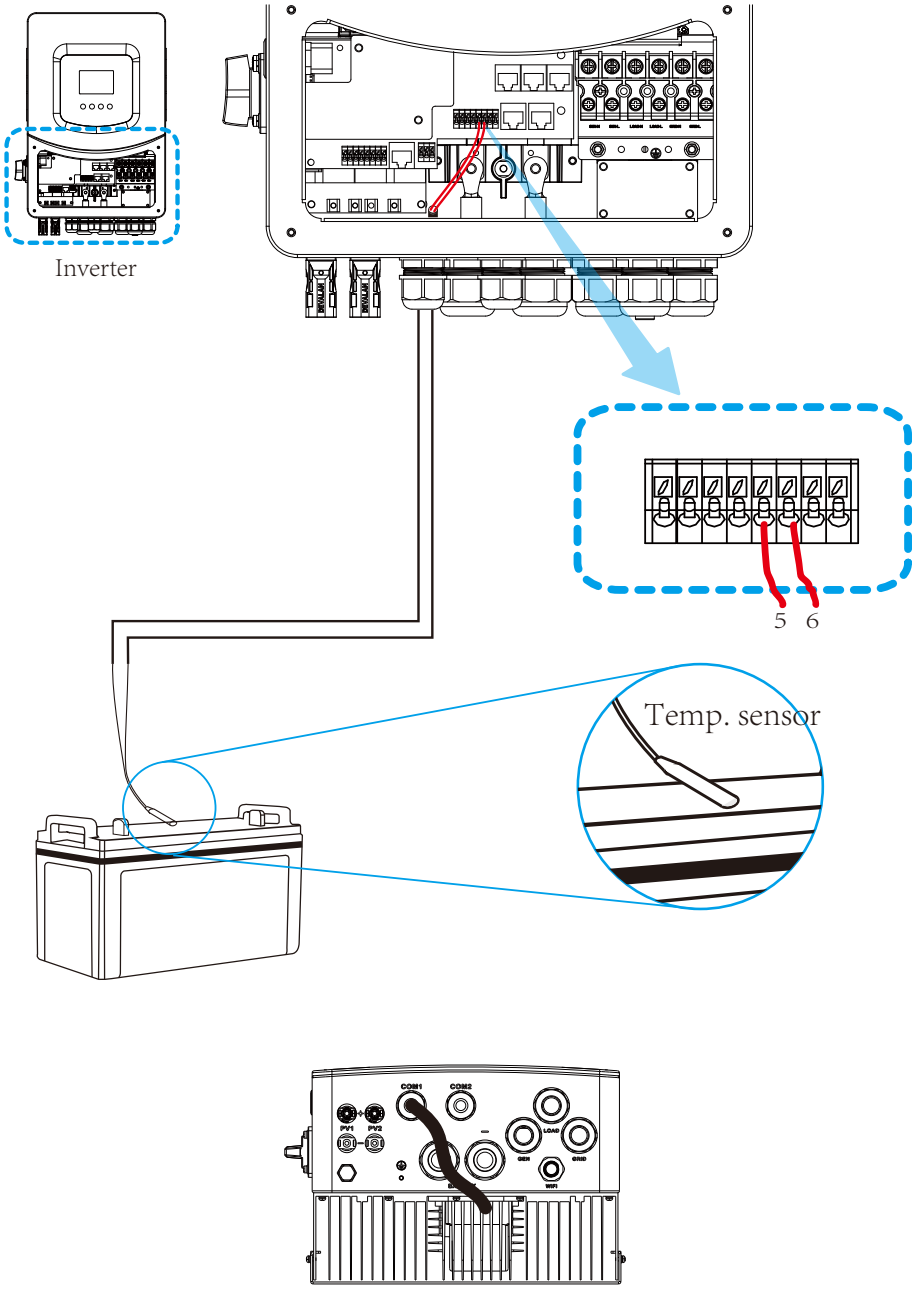

3.5 Grid connection and backup load connection

· Before connecting to the grid, a separate AC breaker must be installed between the inverter and the grid, and also between the backup load and the inverter. This will ensure the inverter can be securely disconnected during maintenance and fully protected from over current. For the 3/3.6/4/4.6/5/6kW model, the recommended AC breaker for backup load is 63A. For the 3/3.6/4/4.6/5/6kW model, the recommended AC breaker for grid is 63A.

·There are three terminal blocks with "Grid" "Load"and "GEN" markings. Please do not misconnect input and output connectors.



Note:
In final installation,breaker certified according to IEC 60947-1 and IEC 60947-2 shall be installed with the equipment.

All wiring must be performed by a qualified personnel.It is very important for system safety and efficient operation to use appropriate cable for AC input connection. To reduce risk of injury, please use the proper recommended cable as below.

Grid connection and backup load connection (Copper wires)

Model	*Wire Size*	*Cable(mm²)*	*Torque value(max)*
3kW	10AWG	4	1.2Nm
3.6kW	8AWG	6	1.2Nm
4/4.6/5/6kW	6AWG	10	1.2Nm

Grid connection and backup load connection (Copper wires) (Bypass)

Model	*Wire Size*	*Cable(mm²)*	*Torque value(max)*
3/3.6/4/4.6/5/6kW	6AWG	10	1.2Nm

Chart 3-3 Recommended Size for AC wires

Please follow below steps to implement AC input/output connection:

1. Before making Grid, load and Gen port connection, be sure to turn off AC breaker or disconnector first.
2. Remove insulation sleeve 10mm length, unscrew the bolts. Thread the wires through the magnetic ring firstly, then insert these wires into the terminals according to polarities indicated on the terminal block. Tighten the terminal screws and make sure the wires are completely and safely connected.

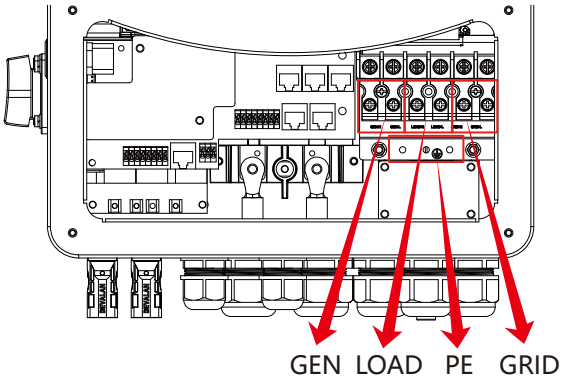
GEN
LOAD
PE
GRID

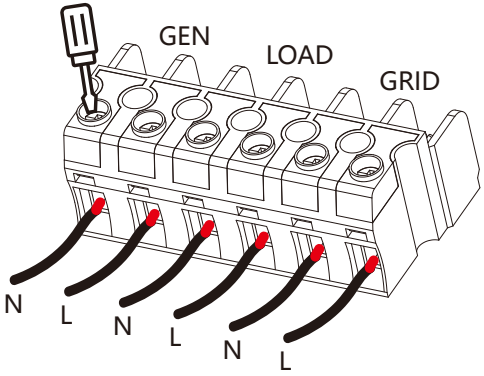
GEN
LOAD
GRID
N
L
N
L
N
L

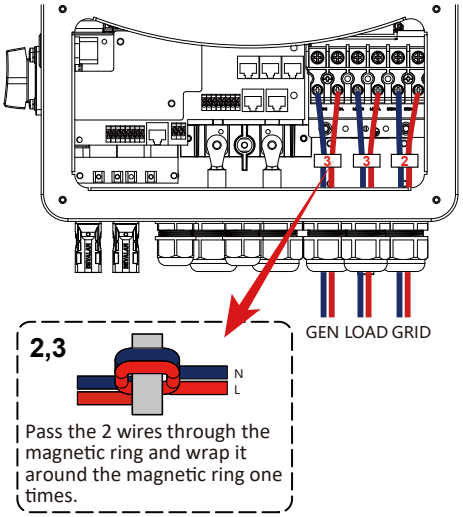
3
3
2
GEN LOAD GRID
2,3
N
L
Pass the 2 wires through the magnetic ring and wrap it around the magnetic ring one times.

Be sure that AC power source is disconnected before attempting to wire it to the unit.

3. Then, insert AC output wires according to polarities indicated on the terminal block and tighten terminal. Be sure to connect corresponding N wires and PE wires to related terminals as well.
4. Make sure the wires are securely connected.
5. Appliances such as air conditioner are required at least 2-3 minutes to restart because it is required to have enough time to balance refrigerant gas inside of circuit. If a power shortage occurs and recovers in short time, it will cause damage to your connected appliances. To prevent this kind of damage, please check manufacturer of air conditioner if it is equipped with time-delay function before installation. Otherwise, this inverter will trigger overload fault and cut off output to protect your appliance but sometimes it still causes internal damage to the air conditioner

3.6 PV Connection

Before connecting to PV modules, please install a separately DC circuit breaker between inverter and PV modules. It is very important for system safety and efficient operation to use appropriate cable for PV module connection. To reduce risk of injury, please use the proper recommended cable size as below.

Model	*Wire Size*	*Cable(mm²)*
3/3.6/4/4.6/5/6kW	12AWG	2.5

Chart 3-4 Cable size

To avoid any malfunction, do not connect any PV modules with possible current leakage to the inverter. For example, grounded PV modules will cause current leakage to the inverter. When using PV modules, please ensure the PV+ & PV- of solar panel is not connected to the system ground bar.

It is requested to use PV junction box with surge protection. Otherwise, it will cause damage on inverter when lightning occurs on PV modules.

3.6.1 PV Module Selection:

When selecting proper PV modules, please be sure to consider below parameters:

1) Open circuit Voltage (Voc) of PV modules not exceeds max. PV array open circuit voltage of inverter.
2) Open circuit Voltage (Voc) of PV modules should be higher than min. start voltage.
3) The PV modules used to connected to this inverter shall be Class A rating certified according to lEC 61730.

Inverter Model	*SUN-3K-SG06LP1-24-EU-BM1*	*SUN-3K-SG06LP1-EU-BM1*	*SUN-3.6K-SG06LP1-EU-BM2*	*SUN-4K-SG06LP1-EU-BM2*	*SUN-4.6K-SG06LP1-EU-BM2*	*SUN-5K-SG06LP1-EU-BM2*	*SUN-6K-SG06LP1-EU-BM2*
PV Input Voltage	370V (125V-500V)						
PV Array MPPT Voltage Range	150V-425V						
No. of MPP Trackers	1		2				
No. of Strings per MPP Tracker	1		1+1				

Chart 3-5

3.6.2 PV Module Wire Connection:

1. Switch the Grid Supply Main Switch(AC)OFF.
2. Switch the DC lsolator OFF.
3. Assemble PV input connector to the inverter.

Safety Hint:
When using PV modules, please ensure the PV+ & PV- of solar panel is not connected to the system ground bar.

Safety Hint:
Before connection, please make sure the polarity of the output voltage of PV array matches the “DC+” and “DC-” symbols.

Safety Hint:
Before connecting inverter, please make sure the PV array open circuit voltage is within the 500V of the inverter.

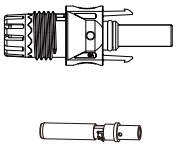

Pic 3.1 DC+ male connector

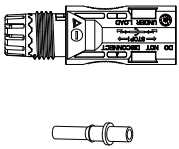

Pic 3.2 DC- female connector

Safety Hint:
Please use approved DC cable for PV system.

The steps to assemble the DC connectors are listed as follows:
a)Strip off the DC wire about 7mm, disassemble the connector cap nut (see picture 3.3).

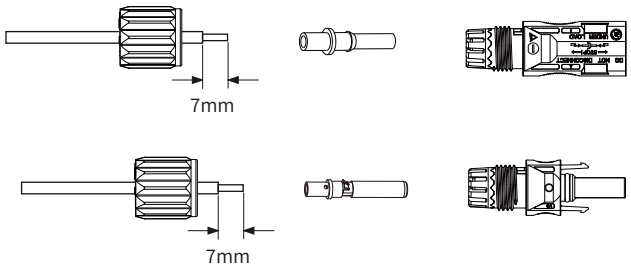

Pic 3.3 Disassemble the connector cap nut

b) Crimping metal terminals with crimping pliers as shown in picture 3.4.

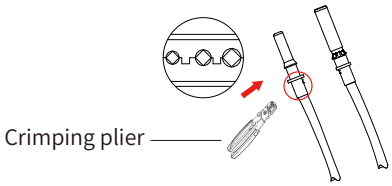

Pic 3.4 Crimp the contact pin to the wire

c) Insert the contact pin to the top part of the connector and screw up the cap nut to the top part of the connector. (as shown in picture 3.5).

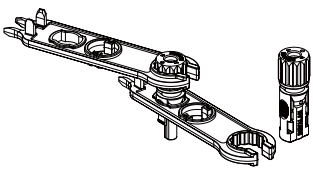

Pic 3.5 connector with cap nut screwed on

d) Finally insert the DC connector into the positive and negative input of the inverter, shown as picture 3.6.

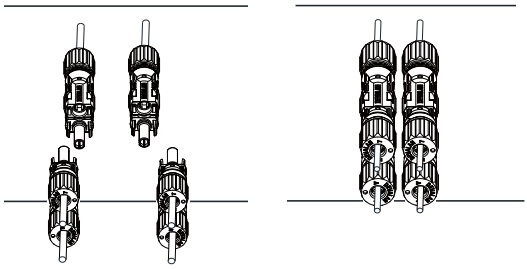

Pic 3.6 DC input connection

Warning:
Sunlight shines on the panel will generate voltage, high voltage in series may cause danger to life. Therefore, before connecting the DC input line, the solar panel needs to be blocked by the opaque material and the DC switch should be 'OFF', otherwise, the high voltage of the inverter may lead to life-threatening conditions.

3.7 CT Connection

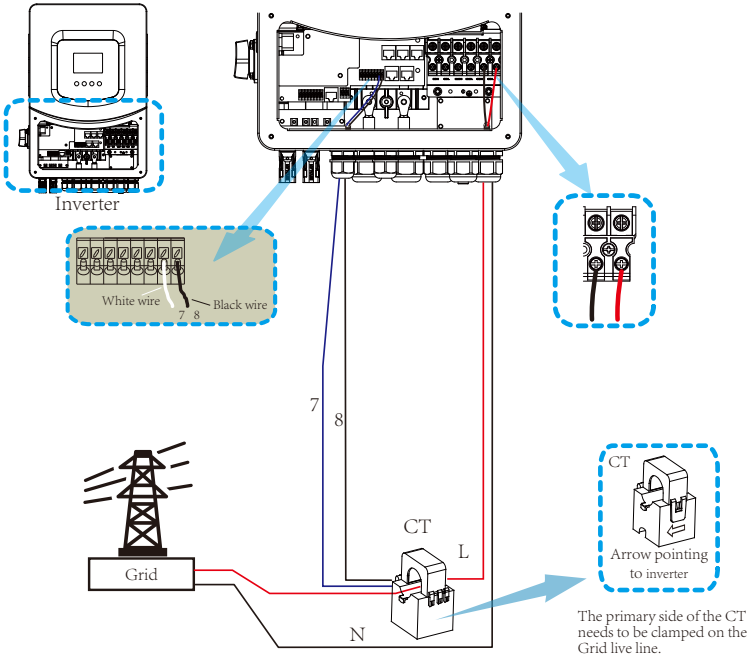

***Note: when the reading of the load power on the LCD is not correct, please reverse the CT arrow.**

3.7.1 Meter Connection

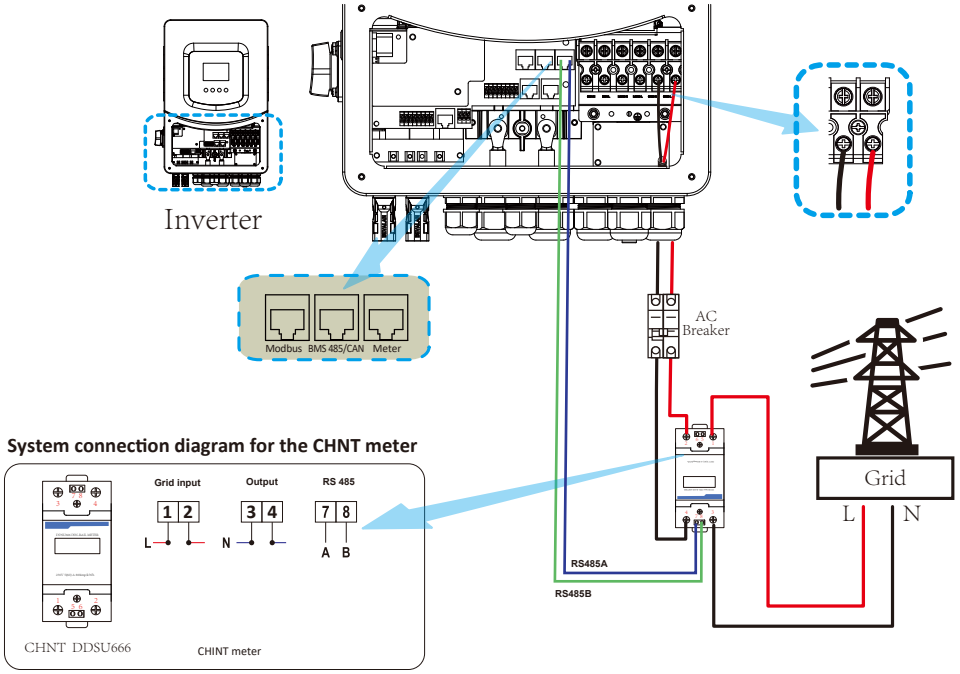

System connection diagram for the CHNT meter

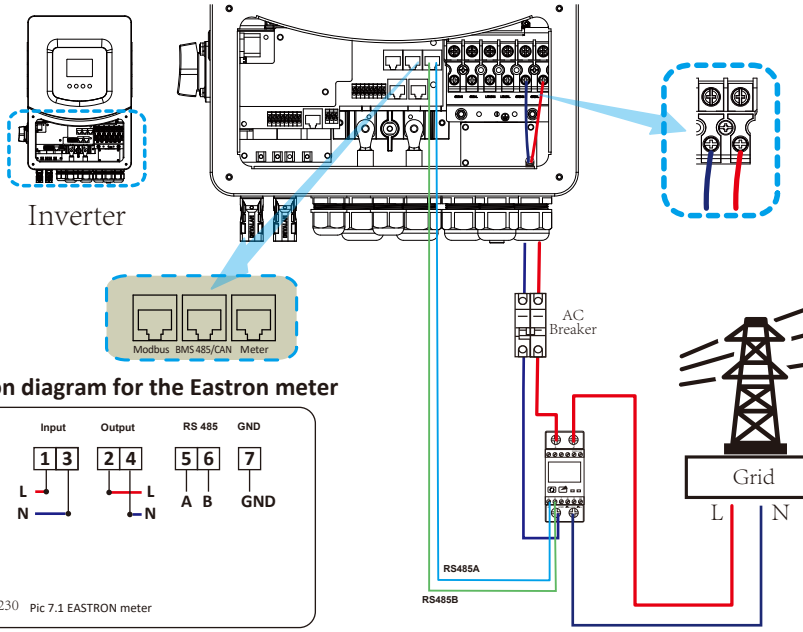

System connection diagram for the Eastron meter

3.8 Earth Connection(mandatory)

Ground cable shall be connected to ground plate on grid side, this prevents electric shock if the original protective conductor fails.

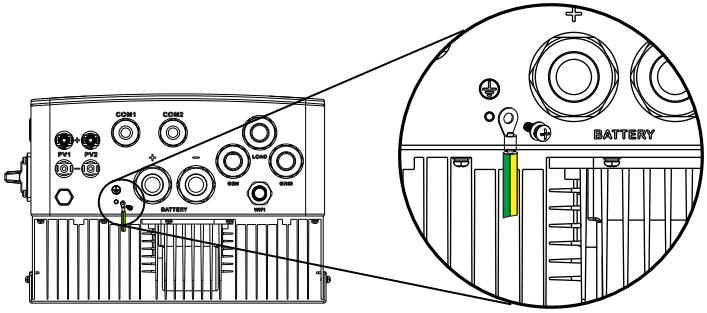

Earth connection (Copper wires)

Model	*Wire Size*	*Cable(mm²)*	*Torque value(max)*
3kW	10AWG	4	1.2Nm
3.6kW	8AWG	6	1.2Nm
4/4.6/5/6kW	6AWG	10	1.2Nm

Earth connection (Copper wires) (Bypass)

Model	*Wire Size*	*Cable(mm²)*	*Torque value(max)*
3/3.6/4/4.6/5/6kW	6AWG	10	1.2Nm

Warning:
Inverter has built-in leakage current detection circuit, The type A RCD can be connected to the inverter for protection according to the local laws and regulations. If an external leakage current protection device is connected, its operating current must be equal to 300 mA or higher, otherwise inverter may not work properly.

3.9 WIFI Connection

3.9.1 Monitoring solutions

The inverter is equipped with a built-in data logger module that supports 4G or Wi-Fi communication(optional), so it has remote monitoring function.
Specification of WiFi module:
Frequency range: 2.412GHz-2.472GHz
Module maximum transmitting power: 13.67dBm
Antenna: External Antenna
Antenna Gain: 4.4dBi

Specification of 4G module
Frequency range: FDD-LTE:B1, B3, B5, B8 TDD-LTE:B34, B38, B39, B40, B41
Module maximum transmitting power: LTE: +23dBm ±2dBm
Antenna: External Antenna
Antenna Gain: Low Band ⩾-8.8dBi High Band ⩾-19. 3dBi

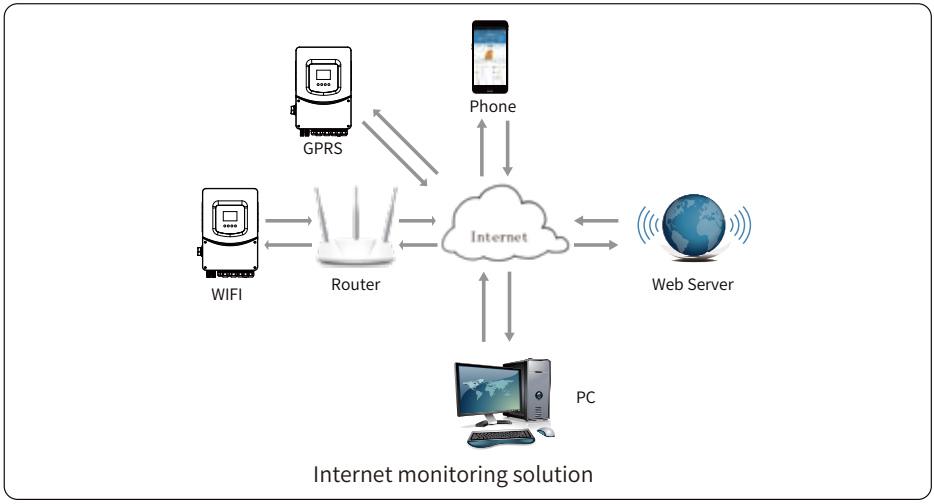

Internet monitoring solution

3.9.2 Monitoring Platform

This series inverter has built-in WIFI module which is able to communicate with router directly.
Web monitoring address: https://deyecloud.com
For mobile phone monitoring system, scan the QR code below to download the APP.
Also you can find it by searching “deye cloud” in App store or Google Play store.
The second QR code is WiFi configuration guide of data logger ,you can follow the manual to add logger to your local network.

The third QR code is Deye cloud user manual ,you can follow the manual to monitor your inverter.

3.9.3 How to connect the inverter to the router via web

1. Turn on the wireless network of your PC or smartphone.

2. Connect your smartphone or PC to the wireless AP network of the inverter.
If there’ s a lable that includes PWD：XXXXXXXX on the inverter casing then the password of AP network is the “XXXXXXXX”: for example, the default password of AP network is “5c4db4d8” of the inverter SN:2302202012.



Inverter SN: 2302202012 Built-in datalogger :3907047089

In addition, the password for the wireless AP network of the inverter can be reset. If you forget the updated password, please contact the Deye service team.

3. Open the browser on your smartphone or PC and enter 10.10.100.254 in the URL address bar, then enter the default username and password "admin" to enter the localhost of the inverter wireless AP network.

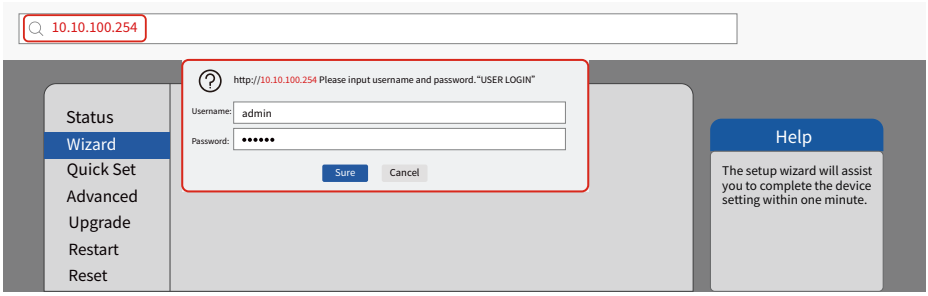

4. Browser jumps to “Status” page, the basic information is listed there.

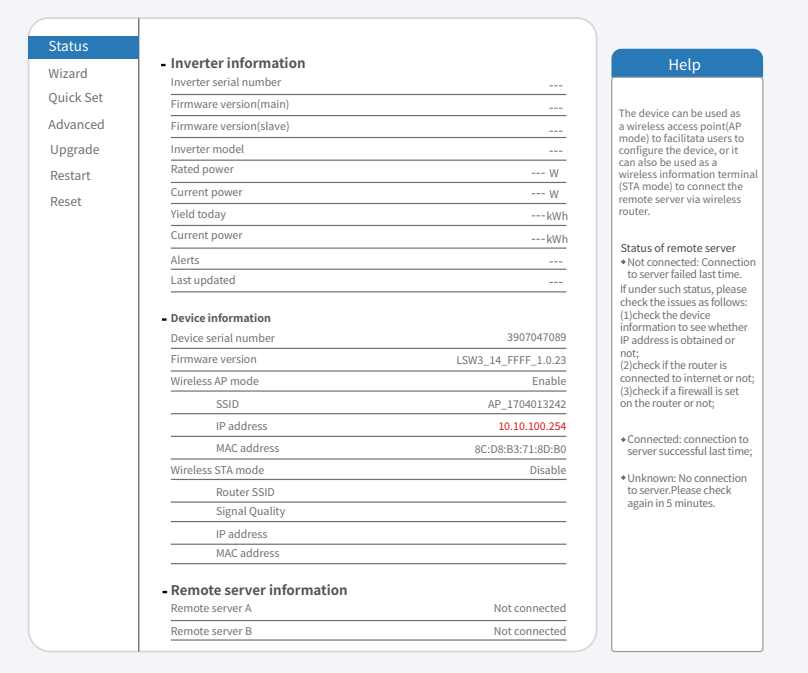

5. Turn to "Wizard" page, click "Refresh" icon to search the usable wireless network, then select the target 2.4G wireless network and click "Next" icon.

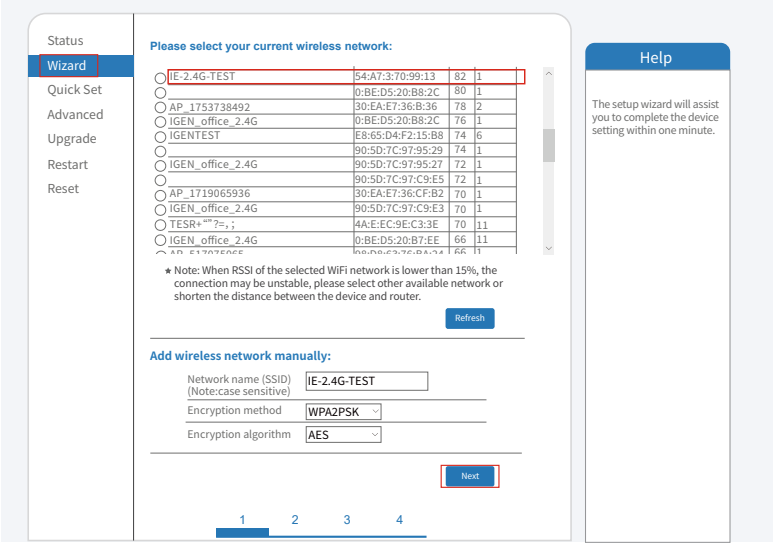

6. Enter the password of the target wireless nework of you router and click "Next" icon.

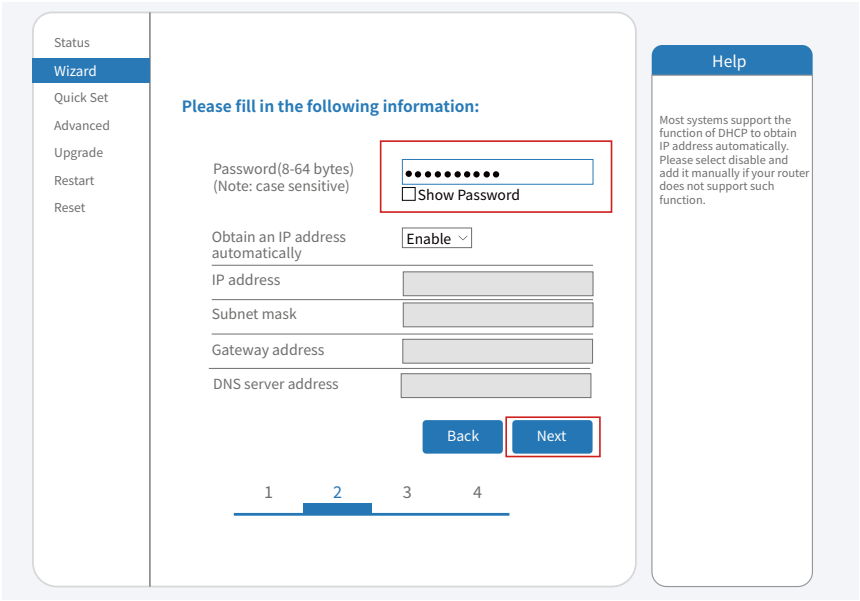

7. Users can enable any options below to enhance the security of the wireless AP network of the inverter and then click "Next" icon.

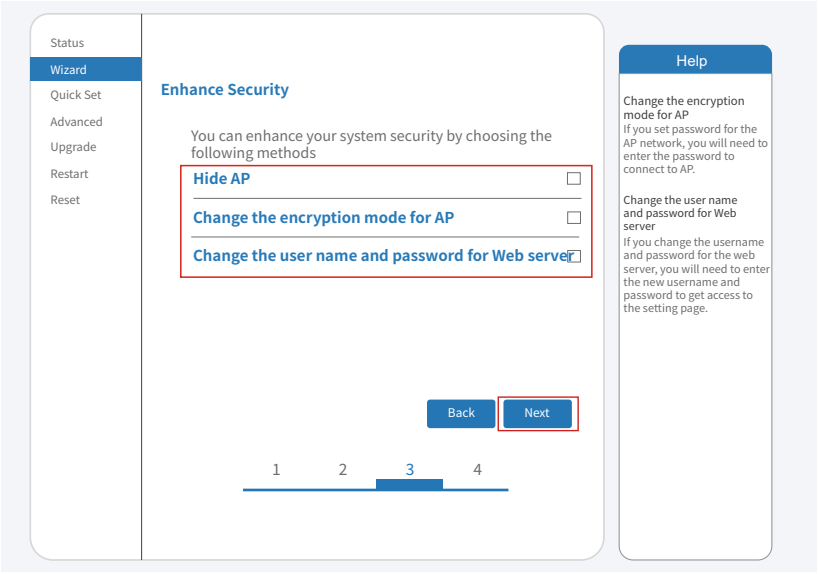

8. If the setup is successful, the following page will pop up and click "OK" icon to reboot the inverter.

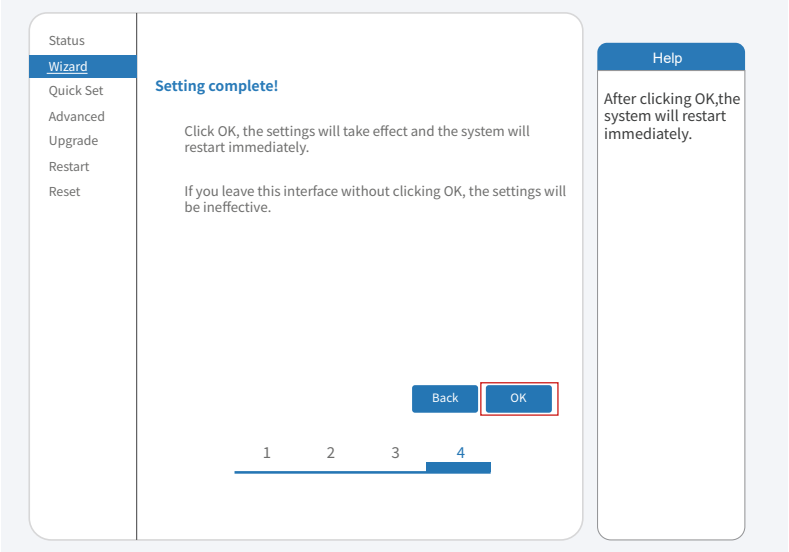

9. Connect your smartphone or PC to the wireless AP network of inverter again after rebooting, then log in to 10.10.100.254 by Browser, and check the system info of "Status" page. After the network setting is done, the remote server A or B should be "connected".

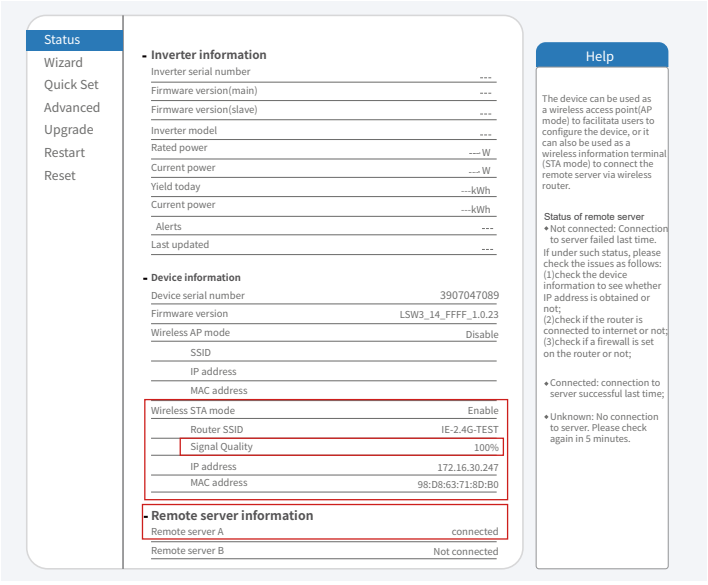

10. When "Connected" is displayed, it indicates that the inverter has been successfully connected to the Solarman cloud platform. Generally speaking, inverters will be online within 10-15 minutes after the first successful configuration.

3.9.4 USER MANUAL for Deye Cloud APP

Please make sure Bluetooth and WiFi are ON and the router can connect to the internet normally.

1 Registration

Go to Deye Cloud App and register.

Click "**Register Account**" and create your account here.

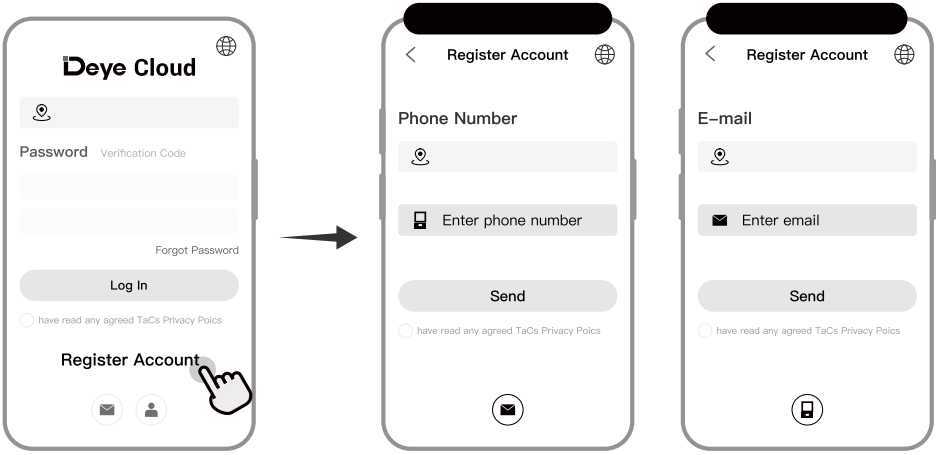

2 Create a Plant

1. Click "**Create a Plant**" to create your plant.

2. Please fill in plant info here.

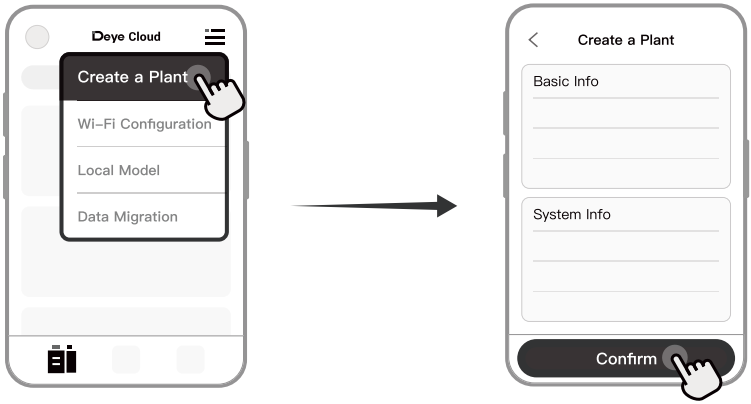

3 Add a Logger

1. Choose a Plant.

2. Go to “Device” page and Click on “Add a Logger”.

3. Scan QR code of the logger, which can be found on the logger body.

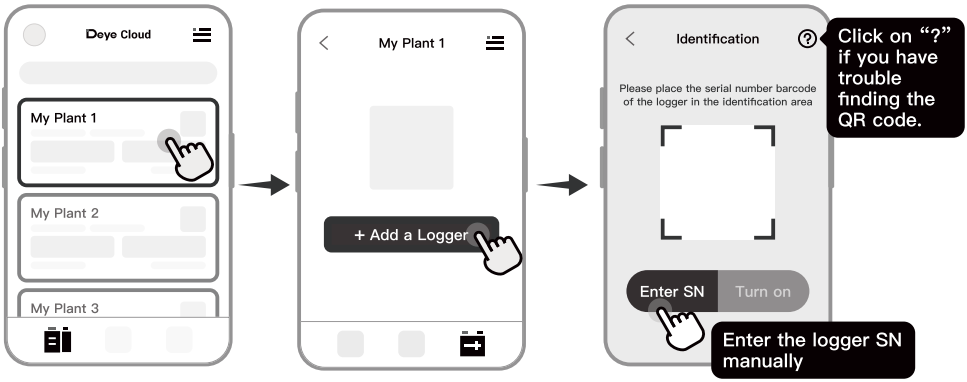

3.9.5 USE APP to Configure WiFi

1. Click “Wi-Fi Configuration” to set the network.(Please make sure Bluetooth and WiFi are ON.)

2.Please wait for a few minutes. Then select “Data Logger SN” and connect 2.4G WiFi.

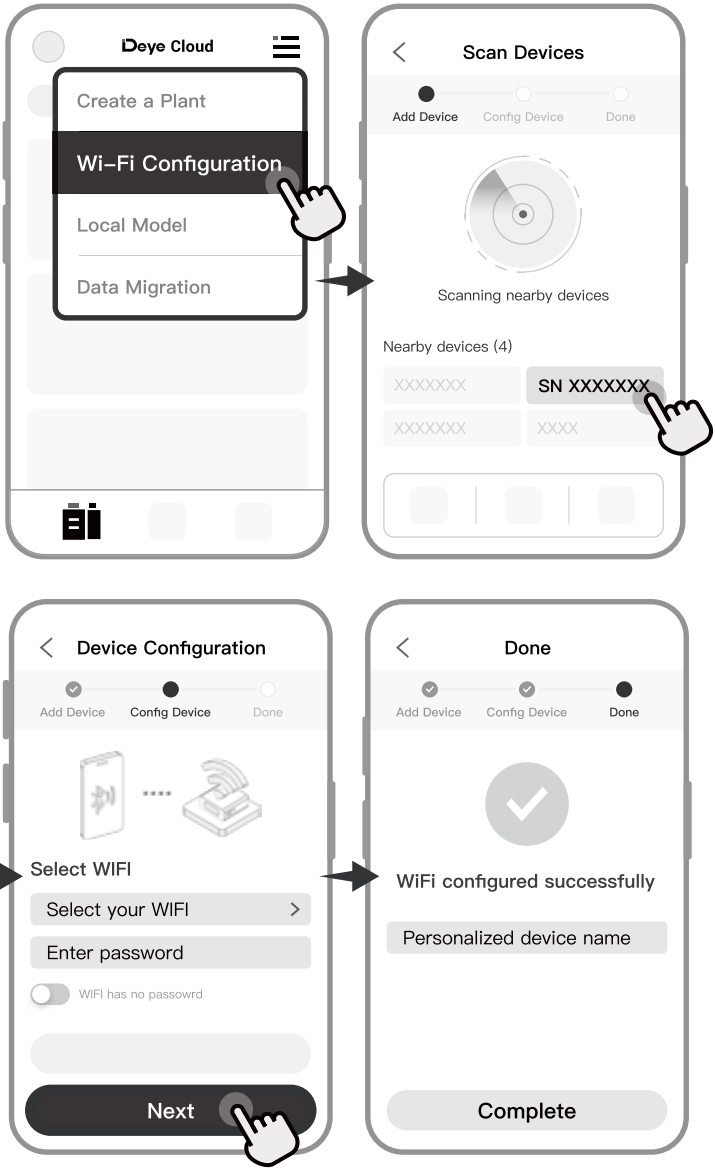

3.10 Wiring System for Inverter

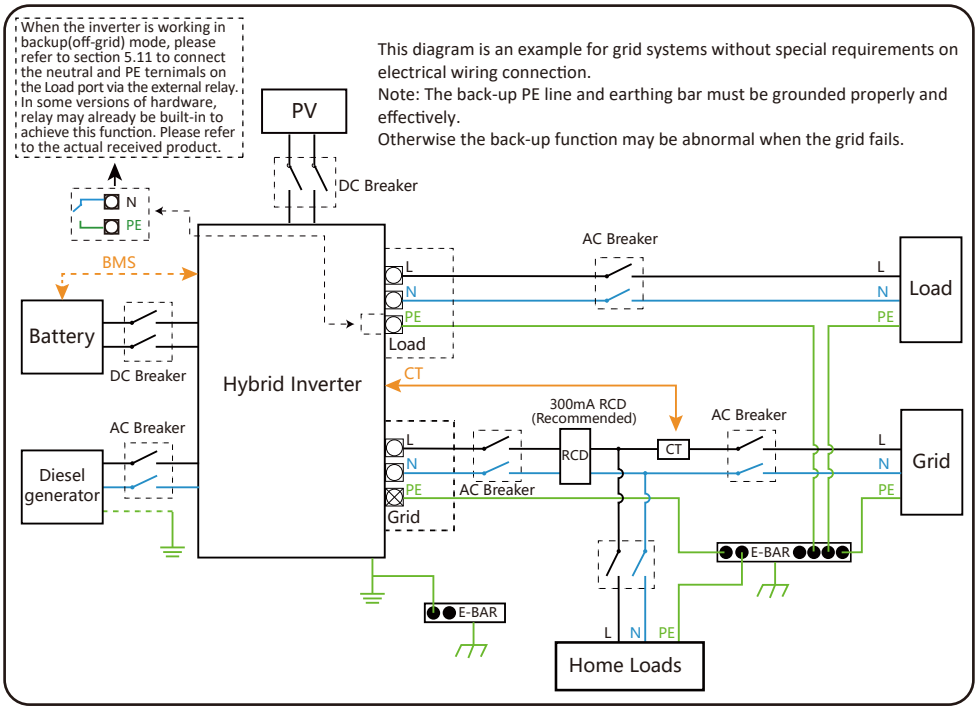

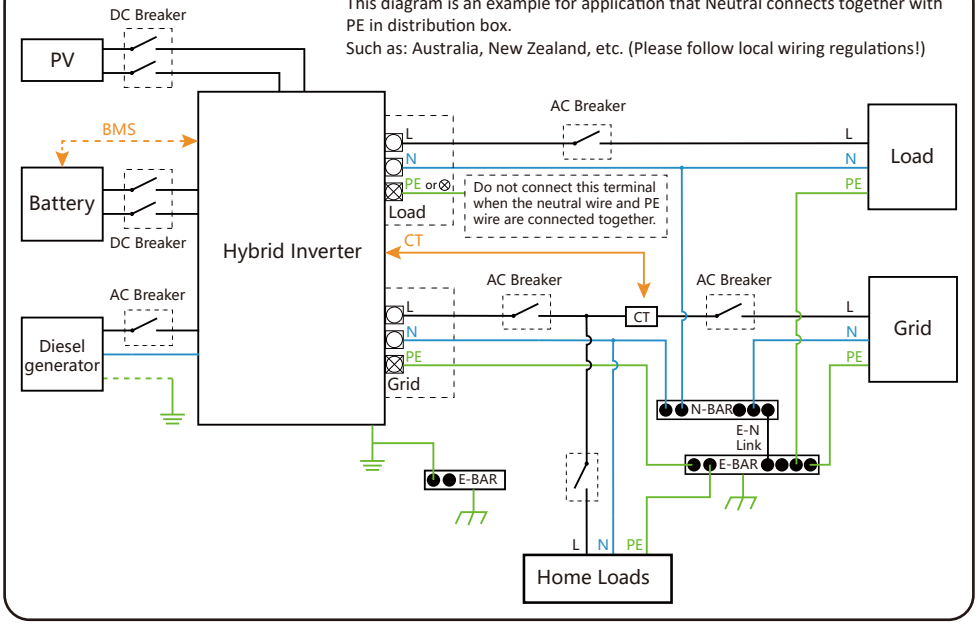

3.11 Typical application diagram of diesel generator

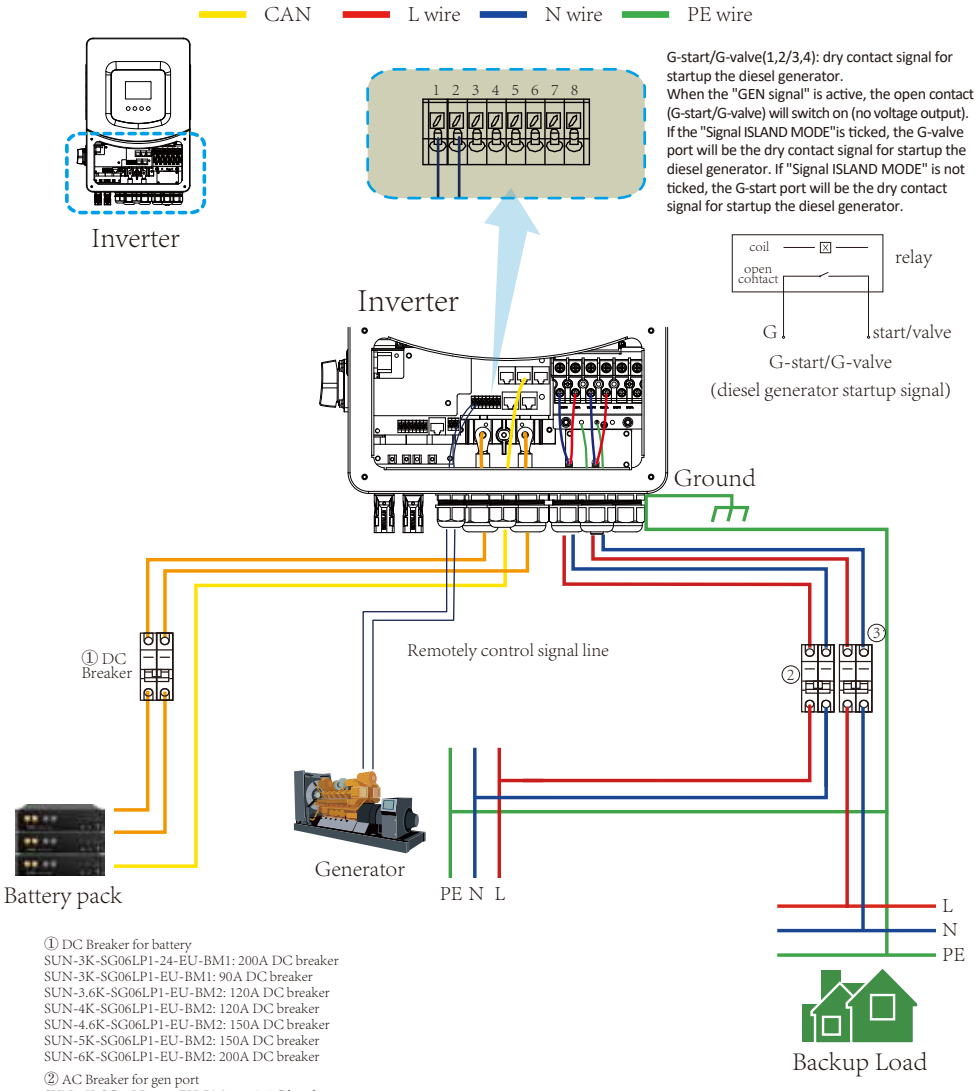

① DC Breaker for battery
SUN-3K-SG06LP1-24-EU-BM1: 200A DC breaker
SUN-3K-SG06LP1-EU-BM1: 90A DC breaker
SUN-3.6K-SG06LP1-EU-BM2: 120A DC breaker
SUN-4K-SG06LP1-EU-BM2: 120A DC breaker
SUN-4.6K-SG06LP1-EU-BM2: 150A DC breaker
SUN-5K-SG06LP1-EU-BM2: 150A DC breaker
SUN-6K-SG06LP1-EU-BM2: 200A DC breaker

② AC Breaker for gen port
SUN-3K-SG06LP1-24-EU-BM1: 63A AC breaker
SUN-3K-SG06LP1-EU-BM1: 63A AC breaker
SUN-3.6K-SG06LP1-EU-BM2: 63A AC breaker
SUN-4K-SG06LP1-EU-BM2: 63A AC breaker
SUN-4.6K-SG06LP1-EU-BM2: 63A AC breaker
SUN-5K-SG06LP1-EU-BM2: 63A AC breaker
SUN-6K-SG06LP1-EU-BM2: 63A AC breaker

③ AC Breaker for backup load port
SUN-3K-SG06LP1-24-EU-BM1: 63A AC breaker
SUN-3K-SG06LP1-EU-BM1: 63A AC breaker
SUN-3.6K-SG06LP1-EU-BM2: 63A AC breaker
SUN-4K-SG06LP1-EU-BM2: 63A AC breaker
SUN-4.6K-SG06LP1-EU-BM2: 63A AC breaker
SUN-5K-SG06LP1-EU-BM2: 63A AC breaker
SUN-6K-SG06LP1-EU-BM2: 63A AC breaker

3.12 Single phase parallel connection diagram

Note: For the parallel system, please choose the "Zero export to CT " mode.

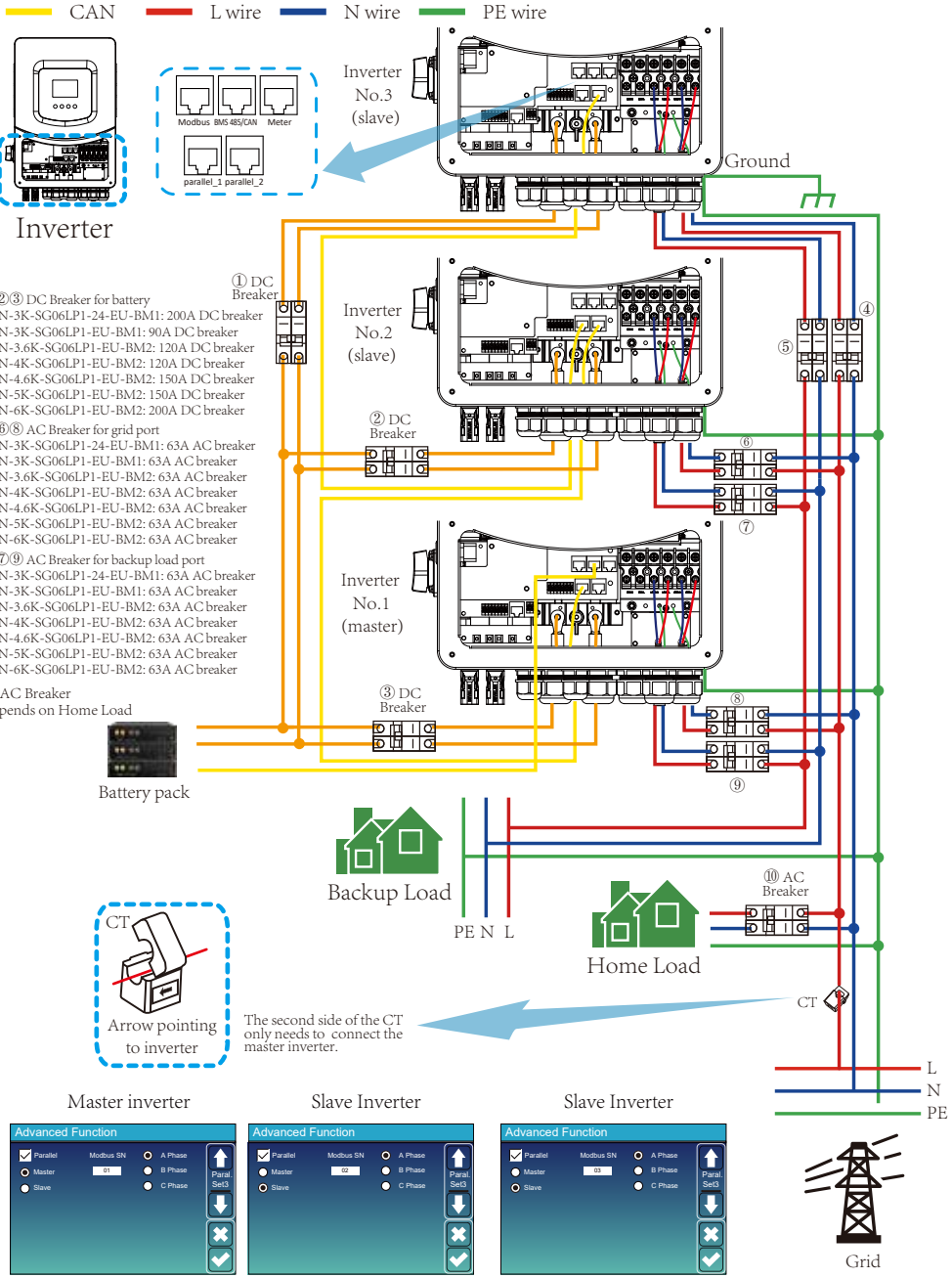

3.13 Three phase Parallel Inverter

①②③ DC Breaker for battery
SUN-3K-SG06LP1-24-EU-BM1: 200A DC breaker
SUN-3K-SG06LP1-EU-BM1: 90A DC breaker
SUN-3.6K-SG06LP1-EU-BM2: 120A DC breaker
SUN-4K-SG06LP1-EU-BM2: 120A DC breaker
SUN-4.6K-SG06LP1-EU-BM2: 150A DC breaker
SUN-5K-SG06LP1-EU-BM2: 150A DC breaker
SUN-6K-SG06LP1-EU-BM2: 200A DC breaker

⑤ AC Breaker for grid port
SUN-3K-SG06LP1-24-EU-BM1: 63A AC breaker
SUN-3K-SG06LP1-EU-BM1: 63A AC breaker
SUN-3.6K-SG06LP1-EU-BM2: 63A AC breaker
SUN-4K-SG06LP1-EU-BM2: 63A AC breaker
SUN-4.6K-SG06LP1-EU-BM2: 63A AC breaker
SUN-5K-SG06LP1-EU-BM2: 63A AC breaker
SUN-6K-SG06LP1-EU-BM2: 63A AC breaker

④ AC Breaker for backup load
SUN-3K-SG06LP1-24-EU-BM1: 63A AC breaker
SUN-3K-SG06LP1-EU-BM1: 63A AC breaker
SUN-3.6K-SG06LP1-EU-BM2: 63A AC breaker
SUN-4K-SG06LP1-EU-BM2: 63A AC breaker
SUN-4.6K-SG06LP1-EU-BM2: 63A AC breaker
SUN-5K-SG06LP1-EU-BM2: 63A AC breaker
SUN-6K-SG06LP1-EU-BM2: 63A AC breaker

⑥ AC Breaker
Depends on Home Load

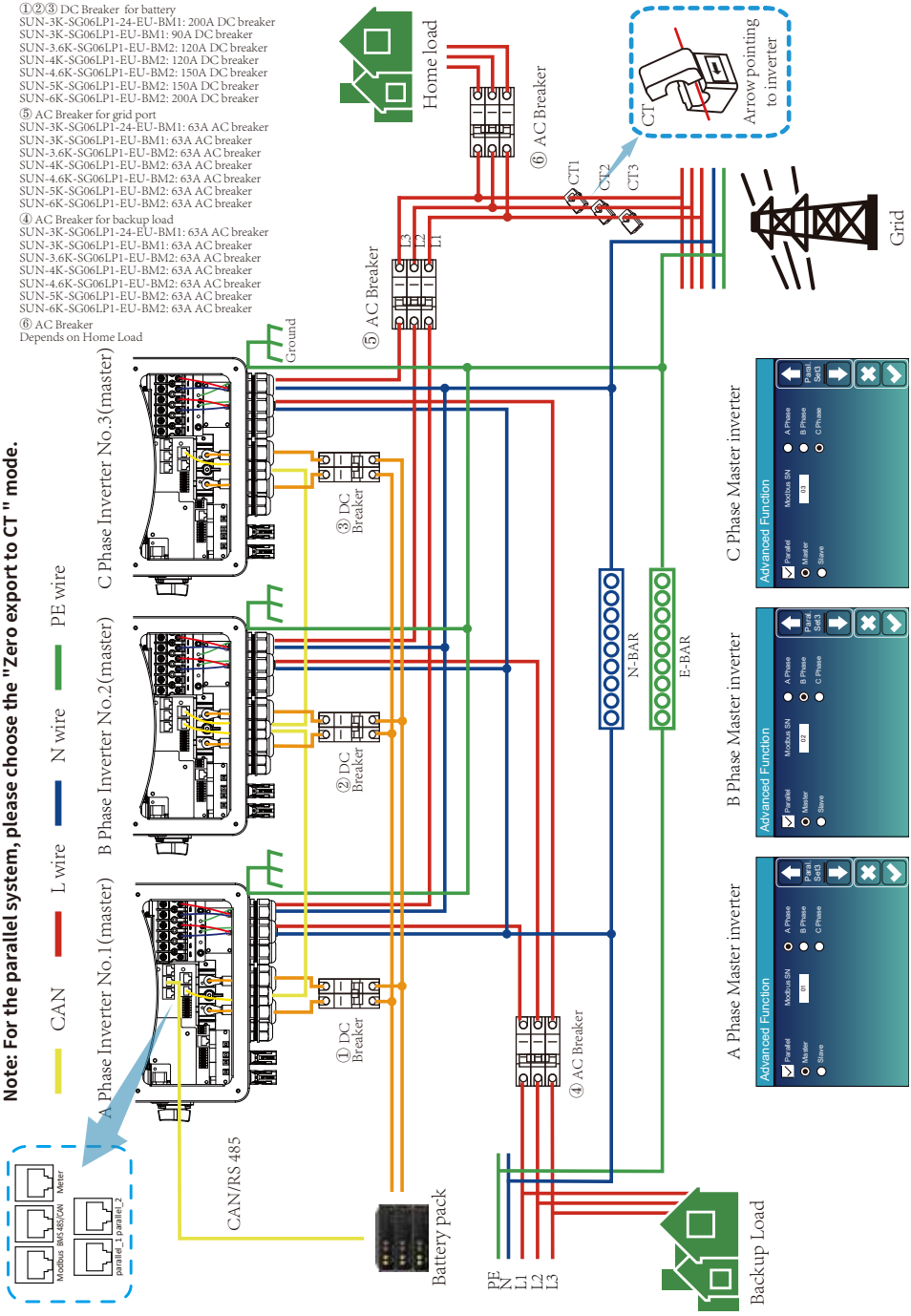

4. OPERATION

4.1 Power ON/OFF

Once the unit has been properly installed and the batteries are connected well, simply press On/Off button(located on the left side of the case) to turn on the unit.When system without battery connected, but connect with either PV or grid, and ON/OFF button is switched off, LCD will still light up(Display will show OFF), In this condition, when switch on ON/OFF button and select NO battery, system can still work.

4.2 Operation and Display Panel

The operation and display panel, shown in below chart, is on the front panel of the inverter. It includes four indicators, four function keys and a LCD display, indicating the operating status and input/output power information.

LED Indicator	*Messages*
Red led solid light	Malfunction
Blue led solid light	Inverter operating normal
No light emission	Not powered on or warning

Chart 4-1 LED indicators

Function Key	*Description*
Esc	To exit setting mode
Up	To go to previous selection
Down	To go to next selection
Enter	To confirm the selection

Chart 4-2 Function Buttons

5. LCD Display Icons

5.1 Main Screen

The LCD is touchscreen, below screen shows the overall information of the inverter.

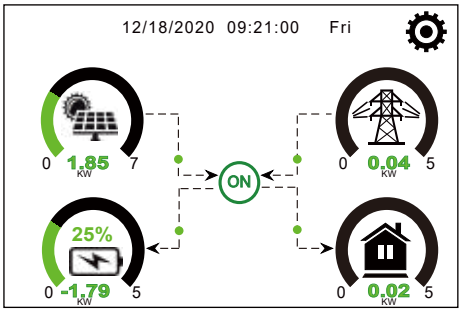

1.The icon in the center of the home screen indicates that the system is Normal operation. If it turns into "comm./FXX" , it means the inverter has communication errors or other errors, the error message will display under this icon(FXX errors, detail error info can be viewed in the System Alarms menu).

2.At the top of the screen is the time.

3.System Setup Icon, Press this set button,you can enter into the system setup screen which including Basic Setup, Battery Setup, Grid Setup, System Work Mode, Generator port use, Advanced function and Li-Batt info.

4.The main screen showing the info including Solar, Grid, Load and Battery. Its also displaying the energy flow direction by arrow. When the power is approximate to high level, the color on the panels will changing from green to red so system info showing vividly on the main screen.

· PV power and Load power always keep positive.
· Grid power negative means sell to grid, positive means get from grid.
· Battery power negative means charge, positive means discharge.

5.1.1 LCD operation flow chart

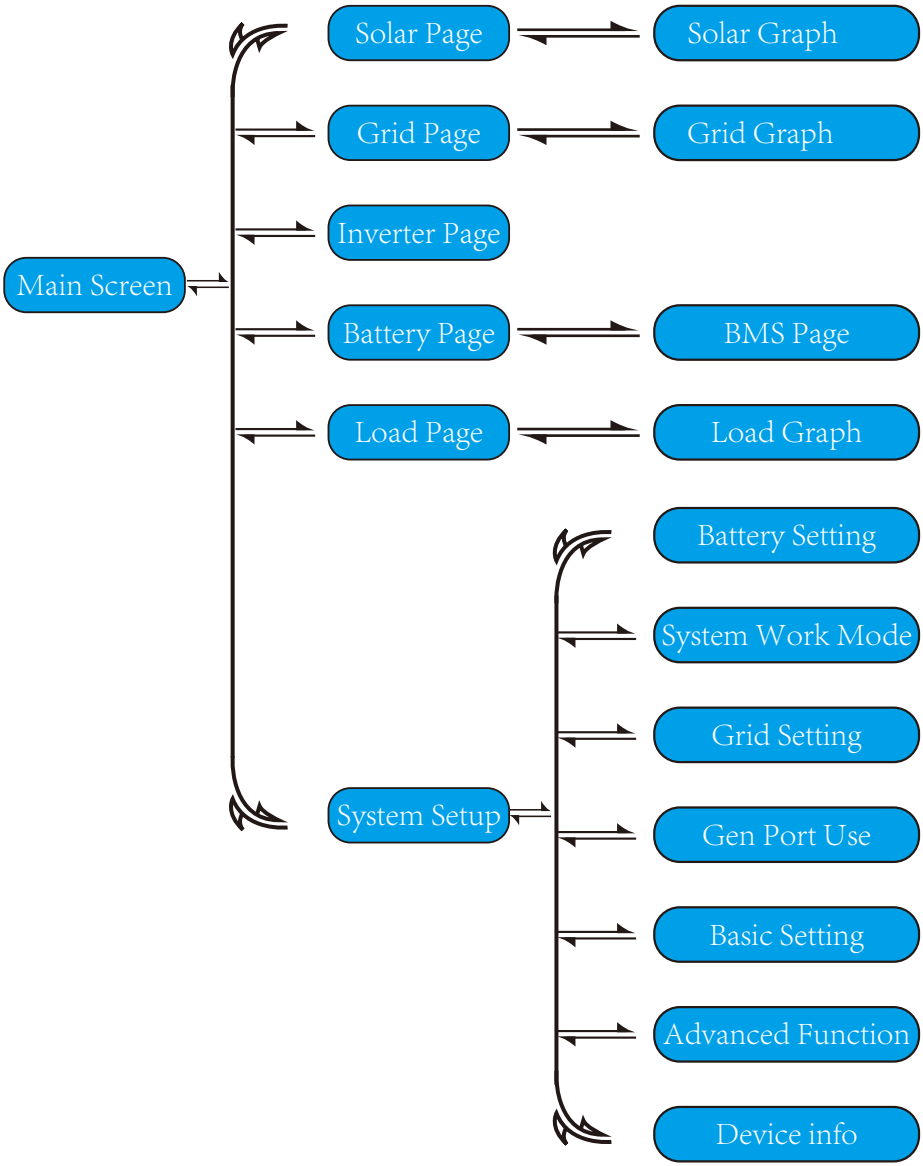

5.2 Solar Power Curve

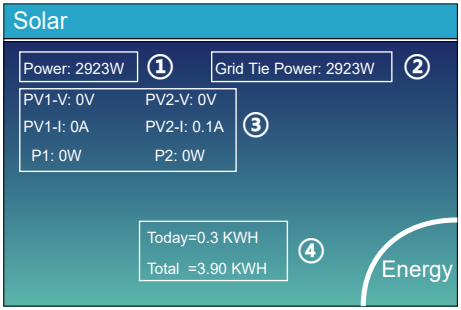

This is Solar Panel detail page.

① Solar Panel Generation.

② **Grid Tie Power:** when there's a string inverter AC couple at the grid or load side of hybrid inverter and there's a meter installed for the string inverter, then the hybrid inverter LCD will show the string inverter output power on its PV icon. Please make sure the meter can communicate with the hybrid inverter successfully.

③ Voltage, Current, Power for each MPPT.

④ Solar Panel energy for Day and Total.

Press the "Energy "button will enter into the power curve page.

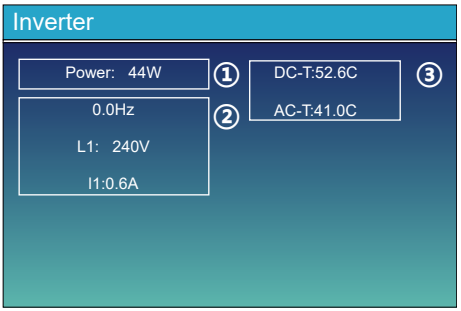

This is Inverter detail page.

① Inverter Generation.

② 0.0Hz: frequency after DC/AC.
Voltage, Current, Power for each Phase.

③ *DC-T: mean DC-DC temperature,
AC-T: mean Heat-sink temperature.
*Note: this part info is not avaiable for some LCD FW.

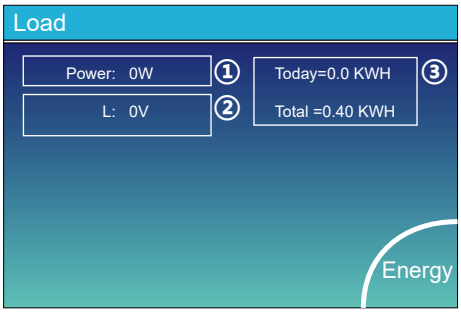

This is Load detail page.

① Load Power.

② Voltage, Power for each Phase.

③ Daily and total Load consumption .

When you check "Selling First" or "Zero export to Load" on system work mode page, the information on this page is about backup load which connect on Load port of hybrid inverter.
When you check "Zero export to CT"on system work mode page, the information on this page is including backup load and home load.

Press the "Energy " button will enter into the power curve page.

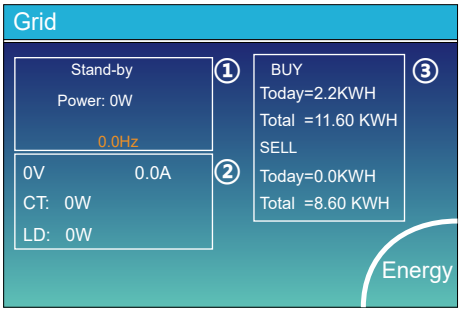

This is Grid detail page.

① Status, Power, Frequency.

② L: Voltage for each Phase
CT: Power detected by the external current sensors
LD: Power detected using internal sensors on AC grid in/out breaker

③ BUY: Energy from Grid to Inverter,
SELL: Energy from Inverter to grid.

Press the "Energy " button will enter into the power curve page.

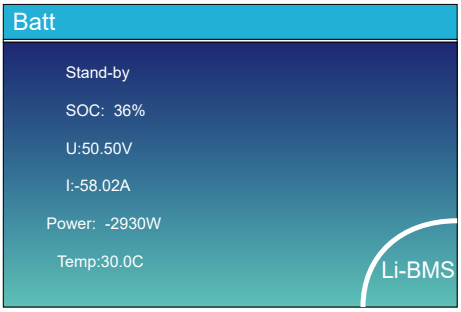

This is Battery detail page.

if you use Lithium Battery, you can enter BMS page.

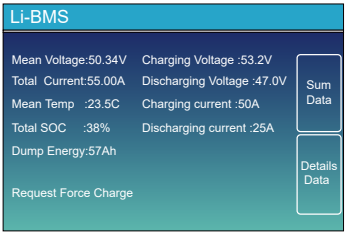

Request Force Charge: It indicates the BMS requests hybrid inverter to charge the battery actively.

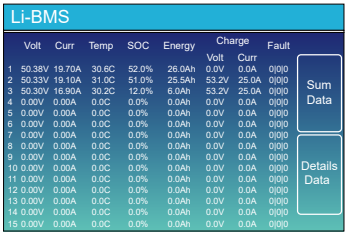

5.3 Curve Page-Solar & Load & Grid

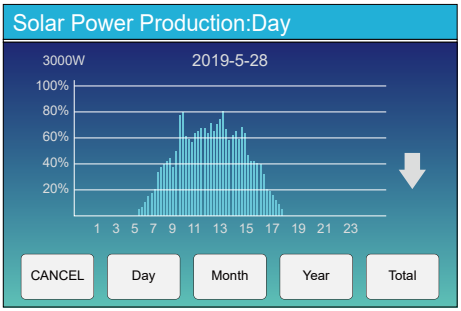

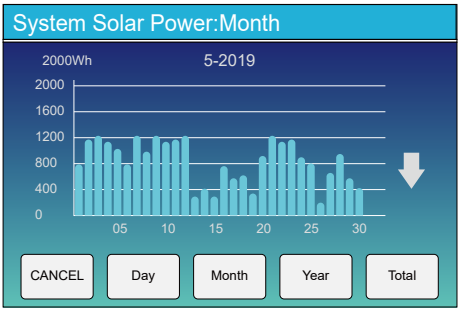

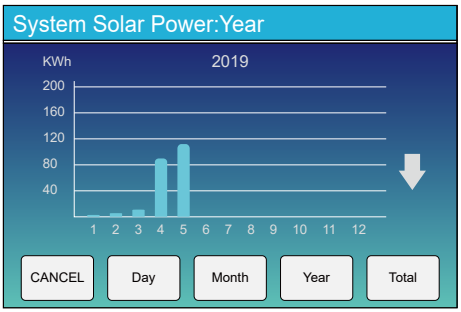

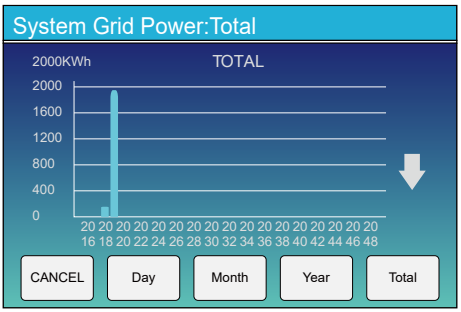

Solar power curve for daily, monthly, yearly and total can be roughly checked on the LCD, for more accuracy power generation, pls check on the monitoring system. Click the up and down arrow to check power curve of different period.

5.4 System Setup Menu

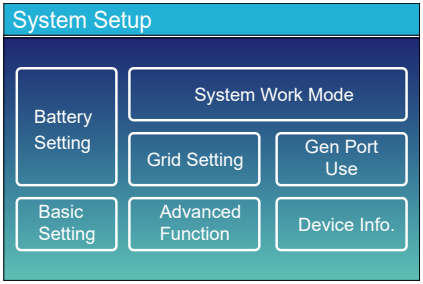

This is System Setup page.

5.5 Basic Setup Menu

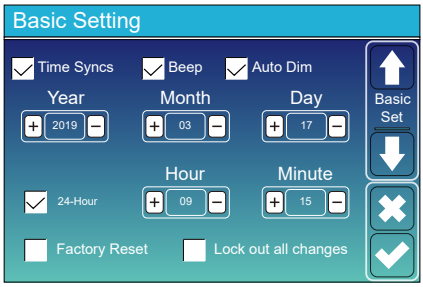

Time Syncs: synchronize cloud platform time. Enable the inverter to automatically
Beep: Used to turn on or off the beep sound in inverter's alarm status.
Auto Dim: Used to automatically adjust the brightness of the LCD display screen.
Factory Reset: Reset all parameters of the inverter.
Lock out all changes: Lock programmable parameters to prevent them from being changed.

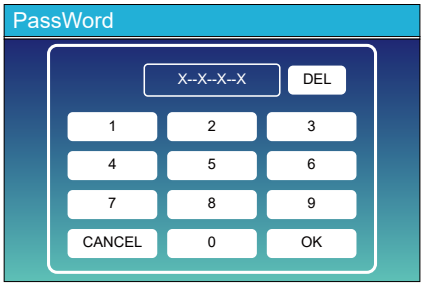

When we select the "factory reset" or“Lock out all changes”, the system will require us to enter a password first to confirm the operation.

Factory Reset Password: 9999

Lock out all changes Password: 7777

5.6 Battery Setup Menu

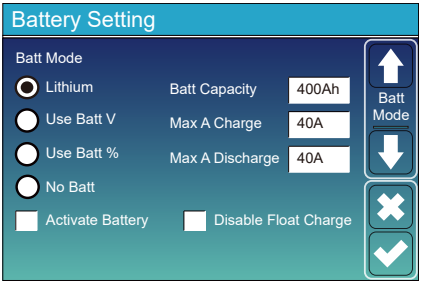

Battery capacity: When set the "Batt Mode" as "Use Batt %", battery capacity can be used to calibrate battery SOC.
Use Batt V: Use Battery Voltage for all the settings (V).
Use Batt %: Use Battery SOC for all the settings (%).
Max. A charge/discharge: Max battery charge/discharge current(0-140A for 3KW-24 model,0-70A for 3KW model, 0-90A for 3.6KW model,0-95A for 4KW model,0-120A for 4.6/5KW model, 0-135A for 6KW model).
For AGM and Flooded, we recommend setting the max A charge/discharge current as no more than battery capacity x 20%.
. For Lithium, we recommend Ah battery size x 50% = Charge/Discharge amps.
. For Gel, follow manufacturer' s instructions.
No Batt: tick this item if no battery is connected to the system.

Active battery: This feature will help recover a battery that is over discharged by slowly charging from the solar array or grid.
Disable Float Charge: For the lithium battery with BMS communication, the inverter will keep the charging voltage at the current voltage when the BMS charging current requested is 0. It is used to help prevent battery from being overcharged.

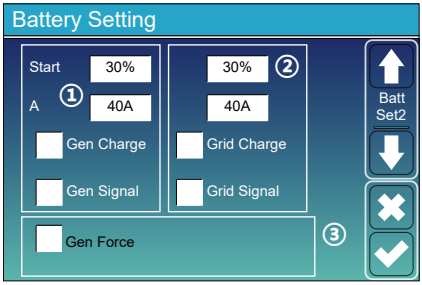

This is Battery Setup page. ①

Start =30%: When battery SOC drop to 30%, the inverter will autostart the connected generator to charge the battery.

A = 40A: The maximum charging current allowed when only use generator power to charge the battery.

Gen Charge: Use the AC input power of GEN port to charge the battery.

Gen Signal: When conditions are sufficient, the inverter will close or open the normally open relay used to control the start and stop of generator.

This is Grid Charge, you need select. ②

Start =30%: No use, Just for customization.

A = 40A: The maximum charging current allowed when only use grid power to charge the battery.

Grid Charge: It's allowed to absorb AC power from the grid port to charge the battery.

Grid Signal: When a generator is connected to the grid port of hybrid inverter, this "Grid signal" can be used to control the dry contact to start or stop the generator.

③

Gen Force: When the generator is connected, it is forcedto start the generator without meeting other conditions.

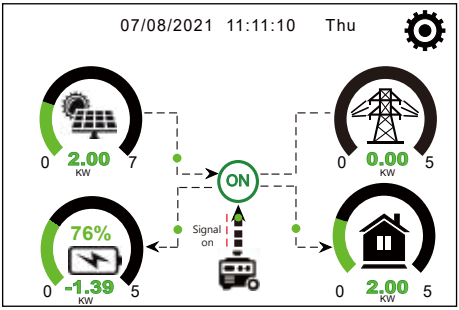

When the "GEN signal" is active, the generator icon will appear on the main screen of inverter LCD display.

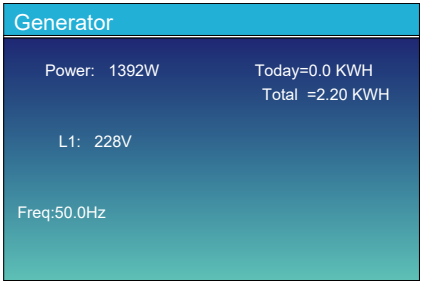

Click the generator icon on the main screen, you can enter the 'Generator' detail page. The information contained on this page is as follows:
(1) How much power is using from generator;
(2) How much energy has used from generator in today or in total;
(3) The output voltage and power on each phase of generator.

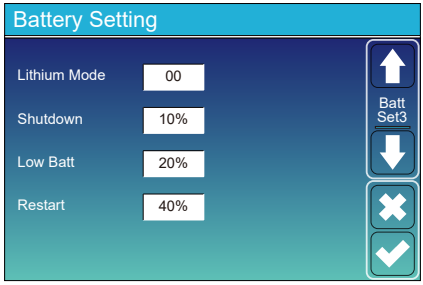

When the “Lithium” mode is selected, the content on the "Batt Set 3" page is shown in the figure on the left.
Lithium Mode: This is the BMS communication protocol code which can be confirmed on the "Approved Battery list" based on the battery model you are using.
Shutdown: Be valid in Off-grid mode, battery can discharge to this SOC, then the DC/AC inverter module of this inverter will be shut down and the solar power can only be used to charge the battery.
Low Batt: Be valid in On-grid mode, when the 'Grid charge' has been checked and the set target battery SOC on 'Time of Use' page isn't less than the "Low Batt" value, the battery SOC will remain above the value of "Low Batt" .
Restart: Be valid in Off-grid mode, after the DC/AC inverter module of this inverter is shut down, the PV power can only be used to charge the battery. After the battery SOC has resumed to this "Restart" value, the DC/AC inverter module will restart to output AC power.

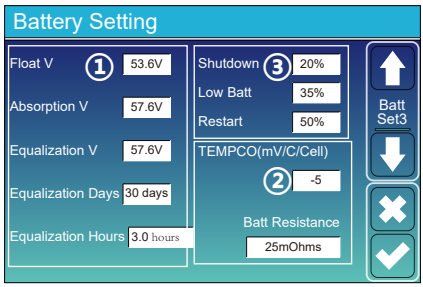

When the "Use Batt V" or "Use Batt %" mode is selected, the content on the "Batt Set 3" page is shown as the figure on the left.
Three stage charging strategy for lead-acid and imcompatible lithium battery. ①
This is for professional installers, you can keep it if you do not know. ②
Shutdown 20%: Be valid in Off-grid mode, when battery SOC/ voltage drop to this value, then the DC/AC inverter module of this inverter will be shut down and the solar power can only be used to charge the battery. ③
Low Batt 35%: Be valid in On-grid mode, when the "Grid charge" has been checked and the set target battery SOC/ voltage on "Time of Use" page isn't less than the "Low Batt" value, the battery SOC/voltage will remain above the value of "Low Batt" .
Restart 50%: Be valid in Off-grid mode, after the DC/AC inverter module of this inverter is shut down, the PV power can only be used to charge the battery. When the battery SOC has returned to this "Restart" value, the DC/AC inverter module will restart to output AC power.

Recommended battery settings

Battery Type	***Absorption Stage***	***Float Stage***	***Equalization Voltage (every 30 days 3hr)***
AGM (or PCC)	14.2V (57.6V)	13.4V (53.6V)	14.2V (57.6V)
Gel	14.1V (56.4V)	13.5V (54.0V)	
Wet	14.7V (59.0V)	13.7V (55.0V)	14.7V (59.0V)
Lithium	Follow its BMS voltage parameters		

5.7 System Work Mode Setup Menu

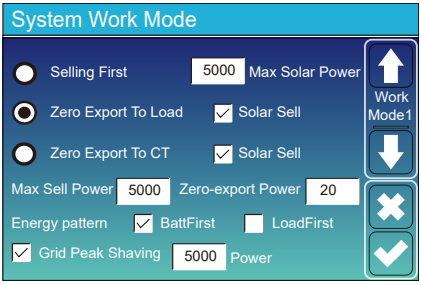

Work Mode

Selling First: This Mode allows hybrid inverter to sell back any excess power produced by the solar panels to the grid. If time of use is active, the battery energy also can be sold into grid.

The PV energy will be used to power the load and charge the battery, then the excess PV energy will flow to grid.

Power source priority for the load is as follows:

1. Solar Panels.
2. Batteries（when the actual battery SOC is higher than the target SOC).
3. Grid.

Zero Export To Load: Hybrid inverter will only provide power to the backup load connected. The hybrid inverter will neither provide power to the home load nor sell power to grid, if the "solar sell" behind is not enabled.

The built-in CT will detect current flowing back to the grid, if there is, the inverter will reduce the generate power to only power the backup loads, smart loads and charge the battery.

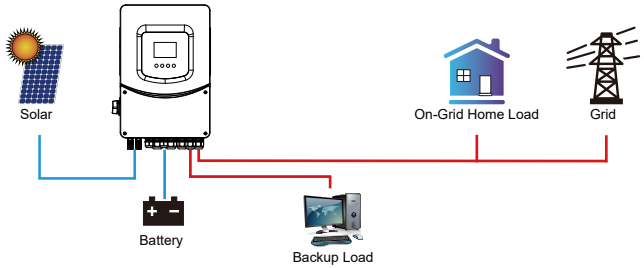

Zero Export To CT: Hybrid inverter will not only provide power to the backup load connected but also give power to the home load connected. If PV power and battery power is insufficient, it will take grid energy as supplement. The hybrid inverter will not sell power to grid, if the "solar sell" behind is not enabled. In this mode, a external CT or smart meter must be installed. As to the installation method of the CT or smart meter, please refer to the chapter 3.7 of this manual. The external CT or smart meter will detect the current flowing back to the grid, if there is, the inverter will reduce generate power to prevent selling power to grid.

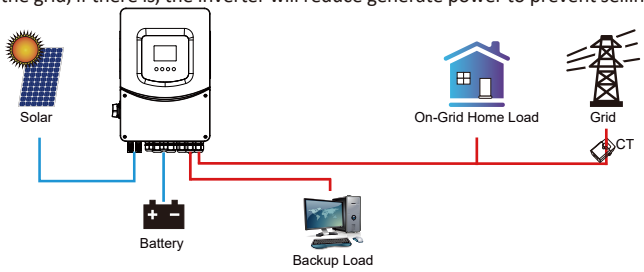

Solar Sell: “Solar sell” is for Zero export to load or Zero export to CT: when this item is active, the PV energy will first power the loads or charge the battery, then the surplus PV energy can be sold back to grid.

Max. sell power: Maximum power allowed to flow to grid.

Zero-export Power: This parameter will ensure the zero-export by taking from the grid some small amount of energy that has been set with this value. It is recommended to set it as 20-100W to ensure the hybrid inverter won' t feed power to grid.

Energy Pattern: Priority of PV power usage. When "Grid charge" is enabled, the default energy pattern is "Load First", this setting will be invalid.

Batt First: PV power is firstly used to charge the battery and then used to power the load. If PV power is insufficient, grid will make supplement for battery and load simultaneously.

Load First: PV power is firstly used to power the load and then used to charge the battery. If PV power is insufficient, grid will make supplement for battery and load simultaneously.
Max Solar Power: The maximum DC input power allowed.
Grid Peak-shaving: When it is active, grid power will be limited within the set value. If the grid peak-shaving power plus PV power plus battery power cannot meet the power consumption of the load, the grid peak-shaving will be invalid, and the power taken from the grid can exceed this set value.

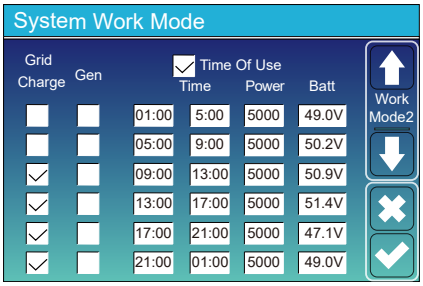

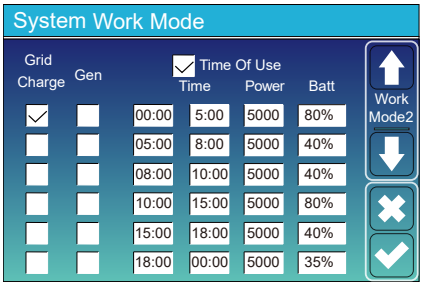

Time of use: it is used to program when to use grid or generator to charge the battery, and when to discharge the battery to power the load. Only tick "Time Of Use" then the follow items (Grid, charge, time, power etc.) will take effect.
Note: when in selling first mode and click time of use, the battery power can be sold into grid.
Grid charge: utilize grid to charge the battery in a time period.
Gen charge: utilize diesel generator to charge the battery in a time period.
Time: real time, range of 01:00-24:00.
Power: The maximum allowed battery discharge power in "Selling First" mode.
Batt(V or SOC %): The target value of battery voltage or SOC during the current time period. If the actual SOC or voltage of the battery is lower than this target value, the battery needs to be charged. If there is a energy source like solar power or grid, the battery will be charged; If the actual SOC or voltage of the battery is higher than this target value, the battery can discharge, and when the solar power is not enough to power the load or the "Selling First "is enabled, the battery will discharge. Assuming that at the end of the previous time period, the actual battery level reaches or approaches the target value of the previous time period.

For example
During 00:00-05:00, if battery SOC is lower than 80%, it will use grid to charge the battery until battery SOC reaches 80%.
During 05:00-08:00, if battery SOC is higher than 40%, hybrid inverter will discharge the battery until the SOC reaches 40%. At the same time, if battery SOC is lower than 40%, then grid will charge the battery SOC to 40%.
During 08:00-10:00, if battery SOC is higher than 40%, hybrid inverter will discharge the battery until the SOC reaches 40%.
During 10:00-15:00, If battery SOC is lower than 80%, hybrid inverter will charge the battery until the SOC reaches 80%. If the PV power is sufficient, the battery can be charged to 100%.
During 15:00-18:00, when battery SOC is higher than 40%, hybrid inverter will dischargethe battery until the SOC reaches 40%.
During 18:00-00:00, when battery SOC is higher than 35%, hybrid inverter will dischargethe battery until the SOC reaches 35%.

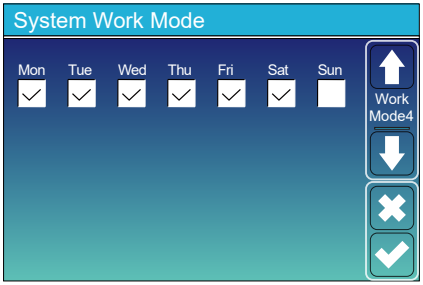

It allows users to choose which day to execute the setting of "Time of Use".
For example, the inverter will execute the time of use page on Mon/Tue/Wed/Thu/Fri/Sat only.

5.8 Grid Setup Menu

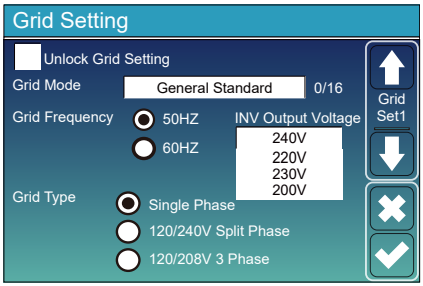

Unlock Grid Setting: before changing the grid parameters, please enable this with password of 7777. Then it is allowed to change the grid parameters.

Grid Mode: General Standard、UL1741 & IEEE1547、CPUC RULE21、SRD-UL-1741、CEI 0-21、EN50549_CZ、Australia_A、Australia_B、Australia_C、NewZealand、VDE4105、OVE_Directive_R25、EN50549_CZ_PPDS_L16A、NRS097、G98/G99、G98/G99_NI、ESB Networks(Ireland). Please follow the local grid code and then choose the corresponding grid standard.

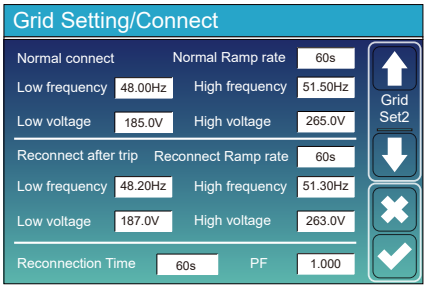

Normal connect: The allowed grid voltage/frequency range when the inverter operates normally.
Normal Ramp rate: It is the startup power ramp.

Reconnect after trip: The allowed grid voltage/frequency range when the inverter reconnects to the grid after tripping from grid.
Reconnect Ramp rate: It is the reconnection power ramp.

Reconnection time: The waiting time for the inverter reconnects to the grid when the grid voltage/frequency return to the allowed range after tripping.
PF: Power factor which is used to adjust inverter reactive power.

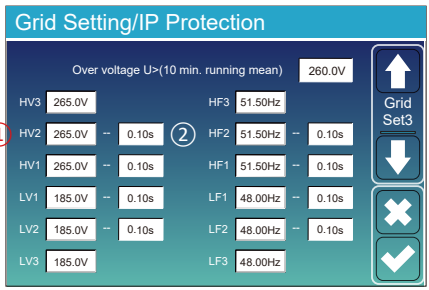

① **HV2:** Level 2 overvoltage protection point; ② 0.10s—Trip time.

HV1: Level 1 overvoltage protection point;
HV3: Level 3 overvoltage protection point.

LV1: Level 1 undervoltage protection point;
LV2: Level 2 undervoltage protection point;
LV3: Level 3 undervoltage protection point.

HF1: Level 1 over frequency protection point;
HF2: Level 2 over frequency protection point;
HF3: Level 3 over frequency protection point.

LF1: Level 1 under frequency protection point;
LF2: Level 2 under frequency protection point;
LF3: Level 3 under frequency protection point.

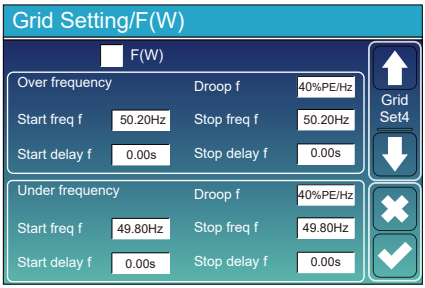

F(W): It's used to adjust the output active power of inverter according to the frequency of grid.
Droop f: percentage of nominal power per Hz
For example, "Start freq F=50.2Hz, Stop freq F=51.5, Droop F=40%PE/Hz" when the grid frequency reaches 51.2Hz, the inverter will decrease its active power at rate of 40% per Hz. Then when frequency of grid is less than 50.2Hz, the inverter will stop decreasing output power.
For the detailed setup values, please follow the local grid code.

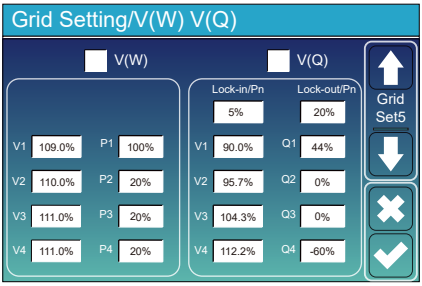

V(W): It is used to adjust the inverter's active power according to the set grid voltage.
V(Q): It is used to adjust the inverter's reactive power according to the set grid voltage.
These two functions are used to adjust inverter's output power (active power and reactive power) when grid voltage changes.

Lock-in/Pn 5%: When the inverter active power is less than 5% rated power, the VQ mode will not take effect.
Lock-out/Pn 20%: If the inverter active power is increasing from 5% to 20% rated power, the VQ mode will take effect again.

For example: V2=110%, P2=20%. When the grid voltage reaches the 110% times of rated grid voltage, inverter output power will reduce its active output power to 20% rated power.
For example: V1=90%, Q1=44%. When the grid voltage reaches the 90% times of rated grid voltage, inverter output power will output 44% reactive output power.
For the detailed setup values, please follow the local grid code.

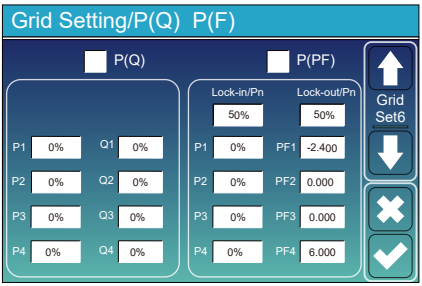

P(Q): It is used to adjust the inverter's reactive power according to the set active power.
P(PF): It is used to adjust the inverter's PF according to the set active power.
For the detailed setup values, please follow the local grid code.

Lock-in/Pn 50%: When the inverter output active power is less then 50% rated power, it won't enter the P(PF) mode.
Lock-out/Pn 50%: When the inverter output active power is higher then 50% rated power, it will enter the P(PF) mode.
Note : only when the grid voltage is equal to or higher than 1.05 times of rated grid voltage, then the P(PF) mode will take effect.

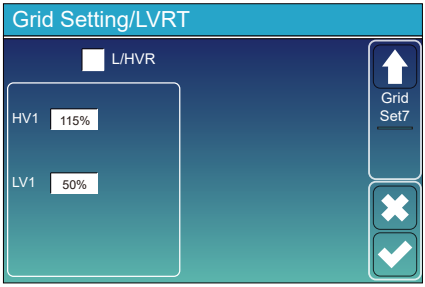

Reserved: This function is reserved.It is not recommended.

5.9 The method of CEI-021 Standard Self-Check

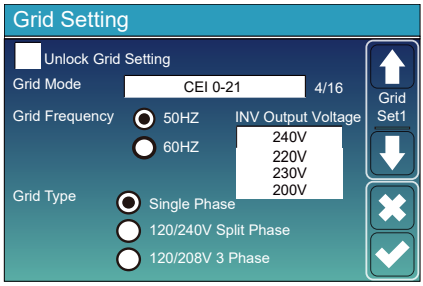

Firstly, tick the “CEI-021” and “Single phase/50Hz” on the grid setting menu.

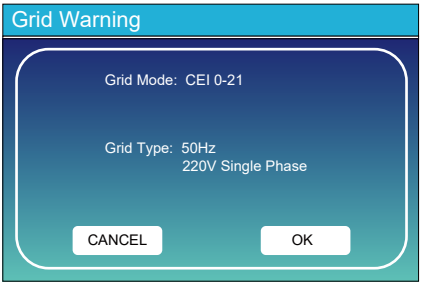

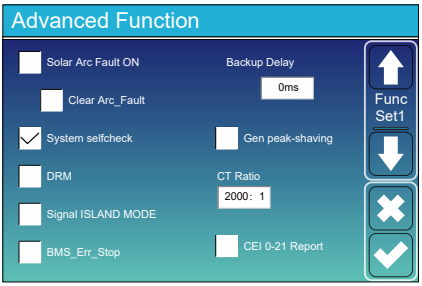

Secondly, tick “System selfchek” ,
then it will ask you input the password,
and the default password is 1234.

Note: please don’t tick “CEI-021 Report ”.

This “System selfcheck” program is valid only after choosing grid type as "CEI-021".

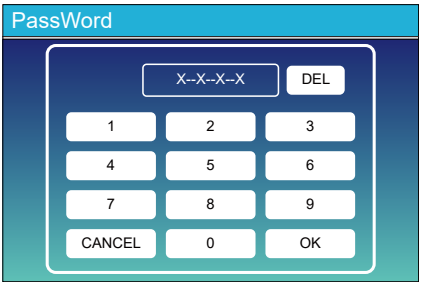

The default password is 1234
After input the password and then tick "OK"`

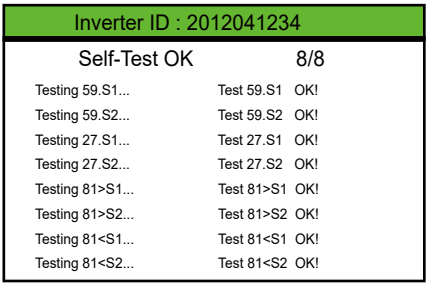

During the self-test process, all the indicators will be on and the alarm keeps on.

When all the test items shows OK, which means the self-test is completed successfully.

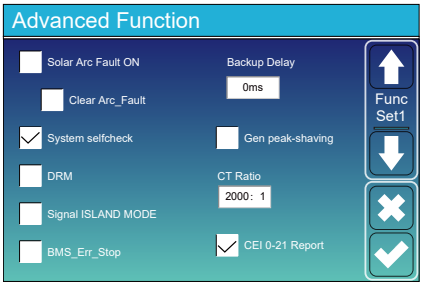

then press “esc” button to quit from this page.
Tick “system selfcheck”on the Advanced function menu and tick “CEI-021 Report”.

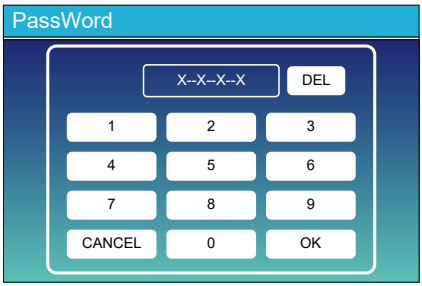

System selfchek: After ticking this item,
it needs input the password.
The default password is 1234.
After input the password and then tick "OK"`

Inverter ID : 2012041234

Self-Test Report

59.S1 threshold253V	900ms	59.S1: 228V	902ms
59.S2 threshold264.5V	200ms	59.S2: 229V	204ms
27.S1 threshold195.5V	1500ms	27.S1: 228V	1508ms
27.S2 threshold 34.5V	200ms	27.S2: 227V	205ms
81>.S1 threshold 50.2Hz	100ms	81>.S1: 49.9Hz	103ms
81>.S2 threshold 51.5Hz	100ms	81>.S2: 49.9Hz	107ms
81<.S1 threshold 49.8Hz	100ms	81<.S1: 50.0Hz	95ms
81<.S2 threshold 47.5Hz	100ms	81<.S2: 50.1Hz	97ms

This page will shows the test result of "CEI-021 self-check".

5.10 Generator Port Use Setup Menu

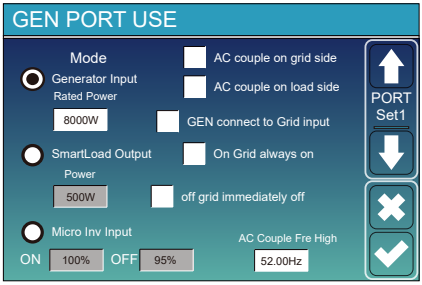

Generator input rated power: The upper limit of power allowed to be drawn from the generator, which is only valid when GEN peak-shaving is enabled.
GEN connect to grid input: connect the diesel generator to the grid input port.
Smart Load Output: Use the GEN port as an AC output port, and the load connected to this port can be controlled on/off by the hybrid inverter.
e.g. Power=500W, ON: 100%, OFF=95%: When the PV power exceeds 500W, and battery bank SOC reaches 100%, Smart Load Port will switch on automatically and power the load connected. When the battery bank SOC < 95% or PV power < 500w, the Smart Load Port will switch off automatically.

Smart Load OFF Batt
• Battery SOC at which the Smart load will switch off.
Smart Load ON Batt
• Battery SOC at which the Smart load will switch on. Besides, the PV input power should exceed the setting value (Power) simultaneously and then the Smart load will switch on.
On Grid always on: When click "on Grid always on" the smart load will switch on when the grid is present.
off grid immediately off: The smart load will stop working immediately when the grid is disconnected if this item is active.
Micro Inv Input: To use the Generator input port as a AC input port of micro-inverter or other on-grid inverter.
* **Micro Inv Input OFF**: When the battery SOC or voltage rise to this set value and the hybrid inverter is operating in off-grid mode, the frequency of GEN port of hybrid inverter will be raised to 'AC Couple Frz High' to make the Grid-tied inverter trip. It's invalid in on-grid mode.
* **Micro Inv Input ON**: When the battery SOC or voltage drops below this set value, the relay on GEN port of hybrid inverter will be closed, then the Grid-Tied inverter will generate power and feed into hybrid inverter.

AC Couple Fre High: If choosing"Micro Inv input", as the battery SOC reaches gradually setting value (OFF), During the process, the microinverter output power will decrease linear. When the battery SOC equals to the setting value (OFF), the system frequency will become the setting value (AC couple Fre high) and the microinverter or on-grid inverter will trip from hybrid inverter.
* **Note**: Micro Inv Input OFF and On is valid for some certain FW version only.
* **AC couple on load side**: Connecting the output of on-grid inverter at the load port of the hybrid inverter. In this situation, the hybrid inverter will not able to show the load power correctly.
* **AC couple on grid side**: Connecting the output of on-grid inverter at the grid port of the hybrid inverter.
* **Note**: Some firmware versions don't have this function.

5.11 Advanced Function Setup Menu

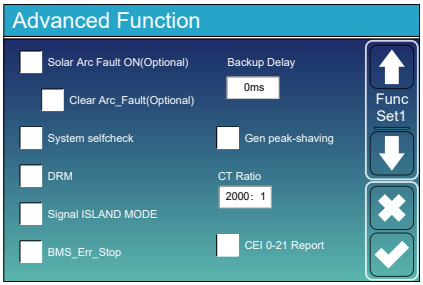

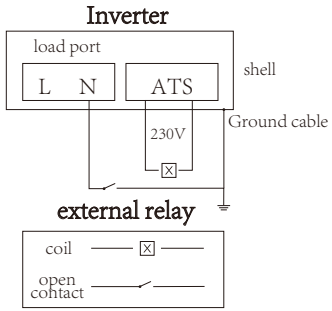

Solar Arc Fault ON(Optional): This function is optional. Some models do not have this function, and the specific details are subject to the hardware version of the inverter received. After enabling this function, the inverter will detect whether there is a arcing fault on the PV side. If arcing occurs, the inverter will report a fault and stop outputting power.
Clear Arc_Fault(Optional): After the arc fault on the PV side is eliminated, enabling this function can eliminate the arc fault alarm of the inverter and restore normal operation of the inverter.
System selfcheck: Disable. this is only for factory.
Gen Peak-shaving: Limit the maximum output power of the generator to the set rated power on "GEN PORT USE" page, the rest of power consumption will be provided by PV and battery to ensure that the generator will not overload.
DRM: Demand response mode, receive external commands for scheduling active power and reactive power.
Backup Delay: When the grid cuts off, the inverter will output power after this set time.
For example, backup delay: 3ms. the inverter will give output power after 3ms when the grid cuts off.
Note: for some old FW version, the function is not available.
BMS_Err_Stop: When it is active, if the battery BMS failed to communicate with inverter, the inverter will stop working and report fault.
Signal ISLAND MODE: When "signal island mode" is checked and the inverter connects the grid, the ATS port voltage will be 0. When "signal island mode" is checked and the inverter disconnected from the grid, the ATS port voltage will output 230Vac voltage. With this feature and external NO type relay, it can realize N and PE disconnection or bond.
More details, please refer to left side picture.
In certain hardware versions, a built-in relay has already been added to achieve this function, eliminating the need for an external relay. Please refer to the actual product you receive.

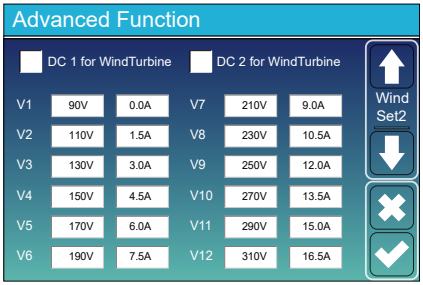

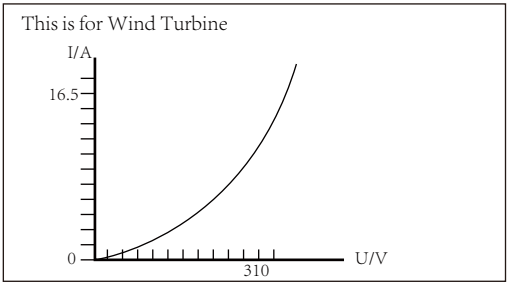

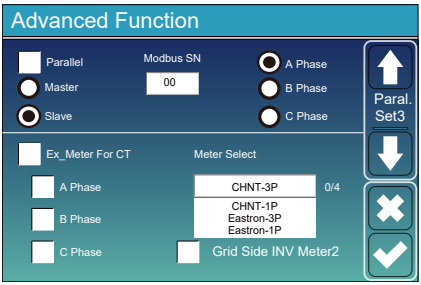

Parallel: Enable this function when several same model hybrid inverters are connecting in parallel.
Master: Select any hybrid inverter in the parallel system as the master inverter, and the master inverter needs to manage the working mode of the parallel system.
Slave: Set the other inverters managed by the master inverter as slave inverter.
Modbus SN: The Modbus address of each inverter, should be different
A/B/C Phase: When forming a 3-phase system in parallel, it is necessary to set which phase of the three-phase system this inverter belongs to.

Ex_Meter For CT: Check this function when using "Zero export to CT" mode and use external smart meter replace the CTs.
A/B/C Phase: When this inverter is installed in three phase grid and measured by three phase smart meter, click corresponding phase which this hybrid inverter is connected. For example, when the hybrid inverter connects to A phase of grid, please click A Phase here.
Meter Select: select the corresponding meter type according to the meter installed in the system.
Grid Side INV Meter2: When there's a on-grid inverter AC couple at the grid or load side of hybrid inverter and there's a meter installed for the on-grid inverter, then the hybrid inverter LCD will show the on-grid inverter output power on its PV icon. Please make sure the meter can communicate with the hybrid inverter successfully.

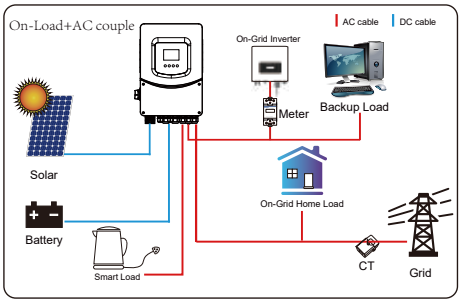

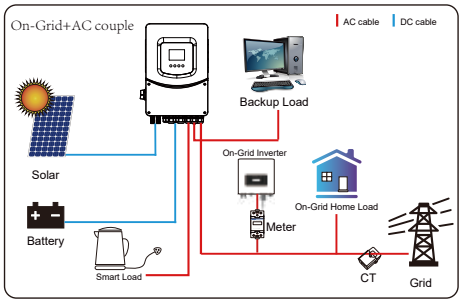

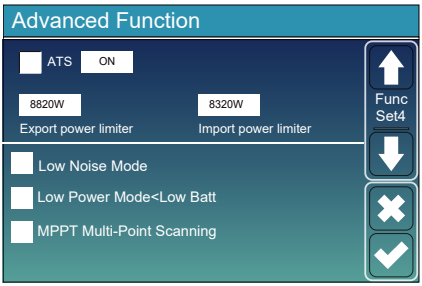

ATS: It is related to the output voltage of the ATS port, and it is recommended to leave it unselected.
Export power limter: It is used to setup the maximum output power allowed to flow to grid.
Import power limiter: when it is active, the import power from grid will be limited. its priority is lower then "grid peak shaving" if the "grid peak shaving" is selected.
Low Noise Mode: In this mode, the sound emitted by the inverter during operation will be smaller.
Low Power Mode<Low Batt: When it's selected and battery SOC is less than "Low Bat" value, the self-consumption power of inverter will supply by grid and battery simultaneously. If unselected, the self-consumption power of inverter will supply by battery.

MPPT Multi-Point Scanning: The inverter will check whether the PV is working on its Max. power point. If not, then it will adjust the voltage of MPPT to ensure the PV operates at the Max.power point.

5.12 Device Info Setup Menu

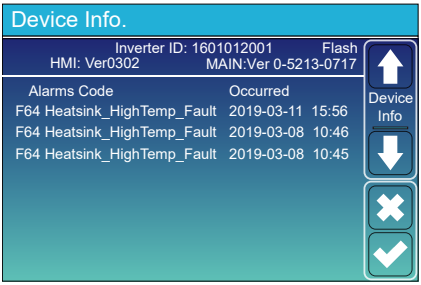

This page show Inverter ID, Inverter version and alarm codes.

HMI: LCD version

MAIN: Control board FW version

6. Mode

Mode I:Basic

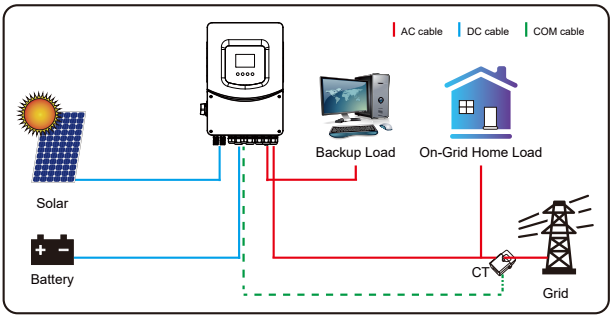

Mode II: With Generator

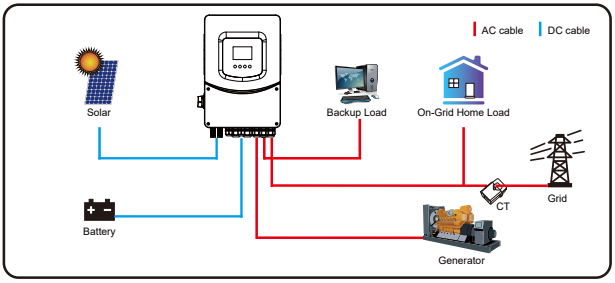

Mode III: With Smart-Load

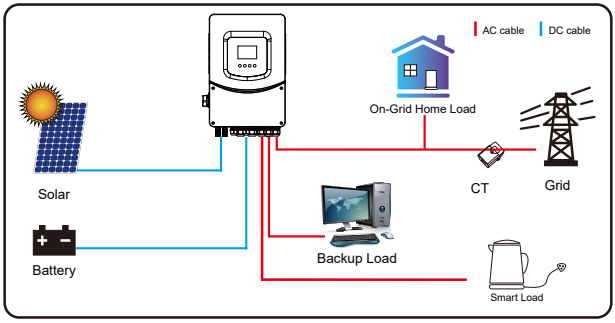

Mode IV: AC Couple

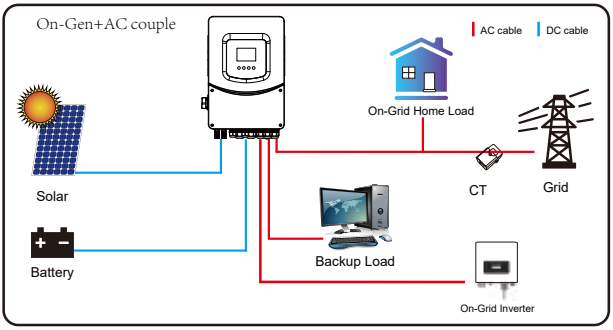

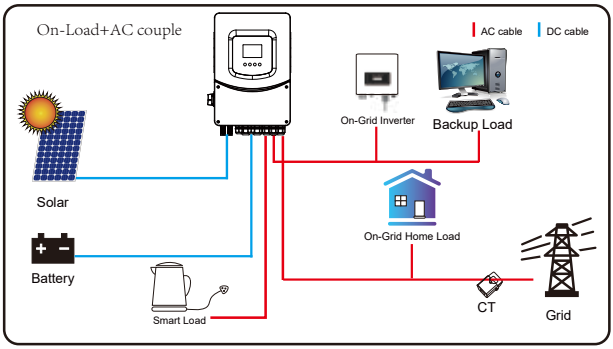

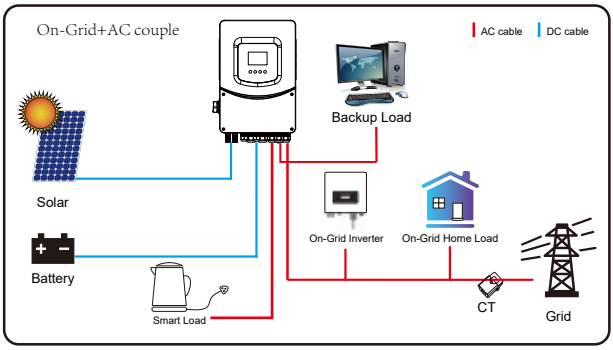

The 1st priority power of the system is always the PV power, then 2nd and 3rd priority power will be the battery bank or grid according to the settings. The last power backup will be the Generator if it is available.

7. Fault information and processing

The energy storage inverter is designed according to the grid-connected operation standard and meets the safety requirements and electromagnetic compatibility requirements. Before leaving the factory, the inverter undergoes several rigorous tests to ensure that the inverter can operate reliably.



If any of the fault messages listed in Table 7-1 appear on your inverter and the fault has not been removed after restarting, please contact your local dealer or service center. You need to have the following information ready.

1. Inverter serial number;
2. Distributor or service center of the inverter ;
3. On-grid power generation date;
4. The problem description (including the fault code and indicator status displayed on the LCD) is as detailed as possible.
5. Your contact information.In order to give you a clearer understanding of the inverter's fault information, we will list all possible fault codes and their descriptions when the inverter is not working properly.

Error code	*Description*	*Solutions*
F08	GFDI _Relay_Failure	1. When inverter is in Split phase(120/240Vac) or three-phase system (120/208Vac) system, the backup load port N line needs to connect ground; 2. If the fault still exists, please contact us for help.
F13	Working mode change	1. When the grid type and frequency changed it will report F13; 2. When the battery mode was changed to "No battery" mode, it will report F13; 3. For some old FW version, it will report F13 when the system work mode changed; 4, Generally, it will disappear automatically when shows F13; 5. If still same, and turn off the DC switch and AC switch and wait for one minute and then turn on the DC/AC switch; 6. Seek help from us, if can not go back to normal state.
F18	AC over current fault of hardware	AC side over current fault 1. Please check whether the backup load power and common load power are within the range; 2. Restart and check whether it is in normal; 3. Seek help from us, if can not go back to normal state.
F20	DC over current fault of the hardware	DC side over current fault 1. Check PV module connect and battery connect; 2. When in the off-grid mode, the inverter startup with big power load, it may report F20. Please reduce the load power connected; 3. Turn off the DC switch and AC switch and then wait one minute,then turn on the DC/AC switch again; 4. Seek help from us, if can not go back to normal state.
F22	Tz_EmergStop_Fault	Please contact your installer for help.
F23	AC leakage current is transient over current	Leakage current fault 1. Check PV side cable ground connection. 2. Restart the system 2~3 times. 3. If the fault still exists, please contact us for help.

Error code	Description	Solutions
F24	DC insulation impedance failure	PV isolation resistance is too low 1. Check the connection of PV panels and inverter is firmly and correctly; 2. Check whether the PE cable of inverter is connected to ground; 3. Seek help from us, if can not go back to normal state.
F26	The DC busbar is unbalanced	1. Please wait for a while and check whether it is normal; 2. When the hybrid in split phase mode, and the load of L1 and load of L2 is big different, it will report the F26. 3. Restart the system 2~3 times. 4. Seek help from us, if can not go back to normal state.
F29	Parallel CANBus fault	1. When in parallel mode, check the parallel communication cable connection and hybrid inverter communication address setting; 2. During the parallel system startup period, inverters will report F29. when all inverters are in ON status, it will disappear automatically; 3. If the fault still exists, please contact us for help.
F34	AC Overcurrent fault	1. Check the backup load connected, make sure it is in allowed power range; 2. If the fault still exists, please contact us for help.
F35	No AC grid	No Utility 1. Please confirm grid is lost or not; 2. Check the grid connection is good or not; 3. Check the switch between inverter and grid is on or not; 4. Seek help from us, if can not go back to normal state.
F41	Parallel system stop	1. Check the hybrid inverter working status. If there's 1 pcs hybrid inverter is in OFF status, the other hybrid inverters may report F41 fault in parallel system. 2. If the fault still exists, please contact us for help.
F42	AC line low voltage	Grid voltage fault 1. Check the AC voltage is in the range of standard voltage in specification; 2. Check whether grid AC cables are firmly and correctly connected; 3. Seek help from us, if can not go back to normal state.
F47	AC over frequency	Grid frequency out of range 1. Check the frequency is in the range of specification or not; 2. Check whether AC cables are firmly and correctly connected; 3. Seek help from us, if can not go back to normal state.
F48	AC lower frequency	Grid frequency out of range 1. Check the frequency is in the range of specification or not; 2. Check whether AC cables are firmly and correctly connected; 3. Seek help from us, if can not go back to normal state.
F56	DC busbar voltage is too low	Battery voltage low 1. Check whether battery voltage is too low; 2. If the battery voltage is too low, using PV or grid to charge the battery; 3. Seek help from us, if can not go back to normal state.

Error code	Description	Solutions
F58	BMS communication fault	1. it tells the communication between hybrid inverter and battery BMS disconnected when"BMS_Err-Stop" is active; 2. if don’ t want to see this happen, you can disable "BMS_Err-Stop" item on the LCD; 3. If the fault still exists, please contact us for help.
F63	ARC fault	1. ARC fault detection is only for US market; 2. Check PV module cable connection and clear the fault; 3. Seek help from us, if can not go back to normal state.
F64	Heat sink high temperature failure	Heat sink temperature is too high 1. Check whether the work environment temperature is too high; 2. Turn off the inverter for 10mins and restart; 3. Seek help from us, if can not go back to normal state.

Chart 7-1 Fault information

Under the guidance of our company, customers return our products so that our company can provide service of maintenance or replacement of products of the same value. Customers need to pay the necessary freight and other related costs. Any replacement or repair of the product will cover the remaining warranty period of the product. If any part of the product or product is replaced by the company itself during the warranty period, all rights and interests of the replacement product or component belong to the company.
Factory warranty does not include damage due to the following reasons:

· Damage during transportation of equipment;
· Damage caused by incorrect installation or commissioning;
· Damage caused by failure to comply with operation instructions, installation instructions or maintenance instructions;
· Damage caused by attempts to modify, alter or repair products;
· Damage caused by incorrect use or operation;
· Damage caused by insufficient ventilation of equipment;
· Damage caused by failure to comply with applicable safety standards or regulations;
· Damage caused by natural disasters or force majeure (e.g. floods, lightning, overvoltage, storms, fires, etc.)

In addition, normal wear or any other failure will not affect the basic operation of the product. Any external scratches, stains or natural mechanical wear does not represent a defect in the product.

8.Limitation of Liability

In addition to the product warranty described above, the state and local laws and regulations provide financial compensation for the product's power connection (including violation of implied terms and warranties). The company hereby declares that the terms and conditions of the product and the policy cannot and can only legally exclude all liability within a limited scope.

9. Datasheet

Model	SUN-3K-SG06LP1-24-EU-BM1	SUN-3K-SG06LP1-EU-BM1	SUN-3.6K-SG06LP1-EU-BM2	SUN-4K-SG06LP1-EU-BM2	SUN-4.6K-SG06LP1-EU-BM2	SUN-5K-SG06LP1-EU-BM2	SUN-6K-SG06LP1-EU-BM2
Battery Input Data							
Battery Type	Lead-acid or Lithium-ion						
Battery Voltage Range(V)	20-30	40-60					
Max. Charging Current(A)	140	70	90	95	120	120	135
Max. Discharging Current(A)	140	70	90	95	120	120	135
Charging Strategy for Li-ion Battery	Self-adaption to BMS						
Number of Battery Input	1						
PV String Input Data							
Max. PV access power(W)	6000	6000	7200	8000	9200	10000	12000
Max. PV Input Power(W)	4800	4800	5760	6400	7360	8000	9600
Max. PV Input Voltage(V)	500						
Start-up Voltage(V)	125						
PV Input Voltage Range(V)	125-500						
MPPT Voltage Range(V)	150-425						
Full Load MPPT Voltage Range(V)	300-425						
Rated PV Input Voltage(V)	370						
Max. Operating PV Input Current(A)	18		18+18				
Max. Input Short-Circuit Current(A)	27		27+27				
No. of MPP Trackers/No. of Strings MPP Tracker	1/1		2/1+1				
Max. Inverter Backfeed Current to The Array	0						
AC Input/Output Data							
Rated AC Input/Output Active Power(W)	3000	3000	3600	4000	4600	5000	6000
Max. AC Input/Output Apparent Power(VA)	3300	3300	3960	4400	4600	5500	6600
Peak Power (off-grid)(W)	2 times of rated power, 10s						
Rated AC Input/Output Current(A)	13.7/13.1	13.7/13.1	16.4/15.7	18.2/17.4	21/20	22.8/21.8	27.3/26.1
Max. AC Input/Output Current(A)	15/14.4	15/14.4	18/17.3	20/19.2	21/20	25/24	30/28.7
Max. Continuous AC Passthrough (grid to load)(A)	50						
Max. Output Fault Current(A)	30	30	36	40	42	50	60
Max. Output Overcurrent Protection(A)	70				80		
Rated Input/Output Voltage/Range(V)	220V/230V 0.85Un-1.1Un						
Grid Connection Form	L+N+PE						
Rated Input/Output Grid Frequency/Range	50Hz/45Hz-55Hz 60Hz/55Hz-65Hz						
Power Factor Adjustment Range	0.8 leading-0.8 lagging						
Total Current Harmonic Distortion THDi	<3% (of nominal power)						
DC Injection Current	<0.5%In						
Efficiency							
Max. Efficiency	97.60%						
Euro Efficiency	96.50%						
MPPT Efficiency	>99%						
Equipment Protection							
DC reverse polarity protection	Yes						
AC Output Overcurrent Protection	Yes						
AC Output Overvoltage Protection	Yes						
AC Output Short Circuit Protection	Yes						
Thermal Protection	Yes						
Insulation Impedance detection	Yes						

DC Component Monitoring	Yes
Arc fault circuit interrupter (AFCI)	Optional
Anti-islanding protection	Yes
DC Switch	Yes
Residual Current Detection	Yes
Surge Protection Level	TYPE II(DC), TYPE II(AC)
Interface	
Display	LCD+LED
Communication Interface	RS485, CAN
Monitor Mode	GPRS/WIFI/Bluetooth/4G/LAN(optional)
General Data	
Operating Temperature Range	-40 to +60℃, >45℃ Derating
Permissible Ambient Humidity	0-100%
Permissible Altitude	3000m
Noise	＜45dB
Ingress Protection(IP) Rating	IP 65
Inverter Topology	Non-Isolated (solar), Isolated (battery)
Over Voltage Category	OVC II(DC), OVC III(AC)
Cabinet size(W*H*D) [mm]	310W×460H×218D (Excluding connectors and brackets)
Weight(kg)	15.6
Warranty	5 Years / Up to 10 Years* *Warranty period varies by installation country. Refer to the Warranty Policy for details.
Type of Cooling	Natural Cooling
Grid Regulation	IEC 61727,IEC 62116,CEI 0-21,EN 50549,NRS 097,RD 140, UNE 217002,OVE-Richtlinie R25,G99,VDE-AR-N 4105
Safety EMC/Standard	IEC/EN 61000-6-1/2/3/4, IEC/EN 62109-1, IEC/EN 62109-2

10. Appendix I

Definition of RJ45 Port Pin for RS485.

No.	BMS 485/CAN Pin
1	BMS-485_B
2	BMS-485_A
3	BMS-GND_485
4	CAN-H
5	CAN-L
6	BMS-GND_485
7	BMS-485_A
8	BMS-485_B

BMS 485/CAN Port

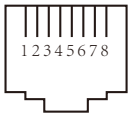

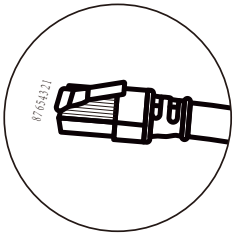

Definition of RJ45 Port Pin for Meter.
This port is used to communicate with energy meter.

No.	Meter Pin
1	METER-485-B
2	METER-485-A
3	A+5V
4	METER-485-B
5	METER-485-A
6	AGND
7	METER-485-A
8	METER-485-B

Meter port

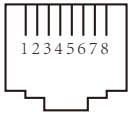

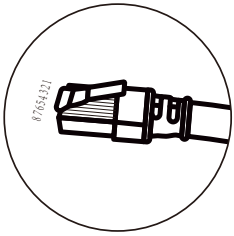

Definition of RJ45 Port Pin of "Modbus port" for remotely monitoring.

No.	Modbus Pin
1	SUNSPE-485_B
2	SUNSPE-485_A
3	GND_SUNSPE-485
4	
5	
6	GND_SUNSPE-485
7	SUNSPE-485_A
8	SUNSPE-485_B

Modbus Port

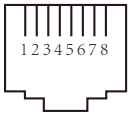

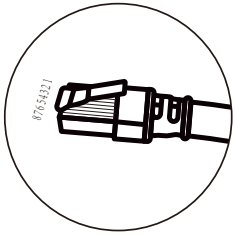

DRM: Only inverters with DRM function selected have this port.
It is used to accept the external control command.

No.	DRM Pin
1	DRM1/5
2	DRM2/6
3	DRM3/7
4	DRM4/8
5	REF-GEN/0
6	GND
7	NetDRM_7
8	NetDRM_7

DRM port

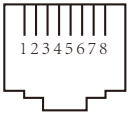

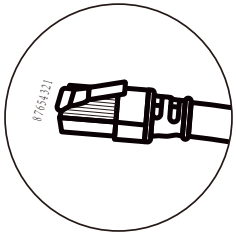

11. Appendix II

1. Split Core Current Transformer (CT) dimension: (mm)
2. Secondary output cable length is 4m.

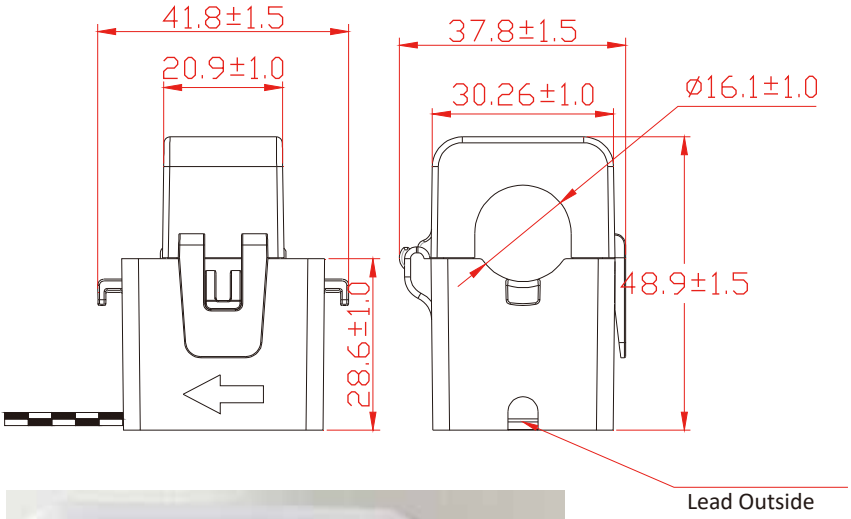



12. EU Declaration of Conformity

Within the scope of the EU directives:

- Radio Equipment Directive 2014/53/EU (RED)
- Restriction of the use of certain hazardous substances 2011/65/EU (RoHS)

NINGBO DEYE INVERTER TECHNOLOGY CO., LTD. confirms herewith that the products described in this document are in compliance with the fundamental requirements and other relevant provisions of the above mentioned directives. The entire EU Declaration of Conformity and certificate can be found at https://www.deyeinverter.com/download/#hybrid-inverter-5.

DOC-DY260202001
www.deyeinverter.com

EU Declaration of Conformity

Product:**Hybrid Inverter**

Models:SUN-3K-SG06LP1-24-EU-BM1;SUN-3K-SG06LP1-EU-BM1;SUN-3.6K-SG06LP1-EU-BM2;
SUN-4K-SG06LP1-EU-BM2;SUN-4.6K-SG06LP1-EU-BM2;SUN-5K-SG06LP1-EU-BM2;
SUN-6K-SG06LP1-EU-BM2

Name and address of the manufacturer: Ningbo Deye Inverter Technology Co., Ltd.
No. 26 South YongJiang Road, Daqi, Beilun, NingBo, China

This declaration of conformity is issued under the sole responsibility of the manufacturer. Also this product is under manufacturer's warranty.
This declaration of conformity is not valid any longer: if the product is modified, supplemented or changed in any other way, as well as in case the product is used or installed improperly.

The object of the declaration described above is in conformity with the relevant Union harmonization legislation:

- Radio Equipment Directive (RED) 2014/53/EU.
- Restriction of the use of certain Hazardous Substances (RoHS) Directive 2011/65/EU and 2015/863/EU

References to the relevant harmonized standards used or references to the other technical specifications in relation to which conformity is declared:

Health and Safety (RED, Article 3.1a)	
EN IEC 62311:2020	●
EN 62109-1:2010	●
EN 62109-2:2011	●
EMC (RED, Article 3.1b)	
EN IEC 61000-6-1:2019	●
EN IEC 61000-6-2:2019	●
EN IEC 61000-6-3:2021	●
EN IEC 61000-6-4:2019	●
EN 301489-1 V2.2.3:2019	●
EN 301489-17 V 3.2.4:2020	●
EN 55011:2016+A1+A11+A2	●
EN 61000-3-3:2013+A1	●
EN 62920:2017+A11+A1	●
EN IEC 61000-3-2:2019	●
CISPR 11:2015+A1+A2	●
Radio Aspects (RED, Article 3.2)	

EU DoC – *v3*

Ningbo Deye Inverter Technology Co., Ltd.
No. 26 South YongJiang Road, Daqi, Beilun, NingBo, China

EN 300328 V2.2.2:2019	●
Cybersecurity (RED, Article 3.3)	
EN 18031-1:2024	●
RoHS	
EN IEC 63000:2018	●

Additional information: CE mark was affixed on the product since 2026.

Nom et Titre / Name and Title:

Bard Dai
Senior Standard and Certification Engineer

Au nom de / On behalf of:

Ningbo Deye Inverter Technology Co., Ltd.

Date / Date (yyyy-mm-dd):

2026-02-02

A / Place:

Ningbo, China

NINGBO DEYE INVERTER TECHNOLOGY CO., LTD.
Add.: No.26 South YongJiang Road, Daqi, Beilun, NingBo, China.
Tel.: +86 (0) 574 8622 8957
Fax.: +86 (0) 574 8622 8852
E-mail: service@deye.com.cn
Web.: www.deyeinverter.com

